Not Measurement Sensitive

National Aeronautics and
Space Administration

MSFC-RQMT-2888
Revision B
June 26, 2001

**George C. Marshall Space Flight Center**
Marshall Space Flight Center, Alabama 35812

# MICROGRAVITY SCIENCE GLOVEBOX (MSG) INVESTIGATION INTERFACE REQUIREMENTS DOCUMENT

Microgravity Science Applications Department
Glovebox Program Office
and
Systems Engineering Division

Approved for Public Release; Distribution is Unlimited

MSFC Form 454 (Rev. October 1992)

# MSG INVESTIGATION INTERFACE REQUIREMENTS DOCUMENT
# MSFC-RQMT-2888

PREPARED BY:

Doug Martin
Hardware Development and Integration
Teledyne Brown Engineering

APPROVED BY:

Donnie McCaghren 7/26/01
Donnie McCaghren, MSG Integration Manager
MSFC/SD46

Carol E Dexter 7/26/01
Carol Dexter, MSG Integration Manager
MSFC/SD46

for Harvey I Shelton 7/26/01
Lucinda Murphy, Systems Engineering, Glovebox
Team MSFC/SD42

J. Michael Cole 7/27/01
Mike Cole, MSG Project Manager
MSFC/SD46

| Release Date: ___ / ___ / ___ | **Marshall Space Flight Center**<br>SPECIFICATION/DOCUMENT CHANGE INSTRUCTION<br>Spec.Doc. No. **MSFC-RQMT-2888** | Page 1 of 1<br>Copy No.: |
|---|---|---|

| Change No./Date | SCN/DCN No./Date | CCBD No./Date | Replacement Page Instructions |
|---|---|---|---|
| 5/30/00 | N/A | GB3-02-0001<br>5/30/00<br>GB00135 | Basic Release |
| 12-11-00 RELEASE<br>10/02/00 | DCN-001 | GB3-02-0007<br>GB00157<br>12/8/00 | Revision A Release. Revision A replace the Basic Release in its Entirety and Incorporate DCN-001 |
| CH 2<br>REV B<br>8/6/01 RELEASE | DCN 002 | GB3-02-0013<br>GB00213<br>6/26/01 | Revision B replaces Revision A and incorporates DCN 002 in lieu of document replacement pages. |

MSFC-FORM 4140 (Revised September 1991)

NOTE: After revising the document, file this sheet in document preceding Table of Contents.

# TABLE OF CONTENTS

**1.0 SCOPE ..... 1**

1.1 USE ..... 1
1.2 CONFIGURATION MANAGEMENT ..... 2
1.3 PAYLOAD DESCRIPTION ..... 2

**2.0 APPLICABLE DOCUMENTS ..... 6**

**3.0 INVESTIGATION INTERFACE REQUIREMENTS AND GUIDANCE ..... 9**

3.1 STRUCTURAL/MECHANICAL, MICROGRAVITY AND STOWAGE INTERFACE REQUIREMENTS ..... 9
*3.1.1 Structural/Mechanical ..... 9*
3.1.1.1 Loads Requirements ..... 9
3.1.1.2 Additional Investigation Requirements ..... 10
3.1.1.3 Attachment Provisions ..... 11
3.1.1.3.1 Bungee Cords ..... 13
*3.1.2 Microgravity ..... 14*
3.1.2.1 Quasi-Steady Requirements ..... 14
3.1.2.2 Vibratory Requirements ..... 14
3.1.2.3 Transient Requirements ..... 15
*3.1.3 Stowage Input Requirements ..... 15*
3.2 ELECTRICAL INTERFACE REQUIREMENTS ..... 15
*3.2.1 Electrical Power Characteristics ..... 17*
3.2.1.1 Steady-State Voltage Characteristics ..... 17
3.2.1.2 Ripple Voltage Characteristics ..... 17
3.2.1.2.1 Ripple Voltage and Noise ..... 17
3.2.1.2.2 Ripple Voltage Spectrum ..... 18
3.2.1.3 Transient Voltages ..... 18
3.2.1.3.1 Fault Clearing and Protection ..... 19
3.2.1.3.2 Non-Normal Voltage Range ..... 21
*3.2.2 Electrical Power Interface ..... 22*
3.2.2.1 Primary Power Connector ..... 22
3.2.2.2 Secondary Power Connector ..... 24
3.2.2.3 Surge Current ..... 25
3.2.2.4 Reverse Energy/Current ..... 27
3.2.2.5 Circuit Protection Devices ..... 28
3.2.2.6 Deleted ..... 30
3.2.2.7 Electrical Load Stand Alone Stability ..... 30
*3.2.3 Electrical Power Consumer Constraints ..... 30*
3.2.3.1 Wire Derating ..... 30
3.2.3.2 Loss of Power ..... 31
*3.2.4 Electromagnetic Compatibility (EMC) ..... 31*
3.2.4.1 Electrical Grounding/Isolation ..... 31
3.2.4.1.1 Electrical Power ..... 31
3.2.4.1.1.1 Primary and Secondary Electrical Power ..... 31
3.2.4.1.1.2 Tertiary or Converted Electrical Power ..... 32
3.2.4.1.1.3 Control Power Bus Return ..... 32
3.2.4.1.1.4 Isolated Electrical Power Within Equipment ..... 32
3.2.4.1.1.5 Isolated Electrical Power Between Equipment ..... 32
3.2.4.1.1.6 Load Conversion ..... 32
3.2.4.1.2 Returns ..... 32
3.2.4.1.2.1 Signal Circuit Return Grounding ..... 32
3.2.4.1.2.2 Alternating Current Power Returns ..... 33
3.2.4.1.2.3 Anolog, Differential Circuit Return ..... 33
3.2.4.1.2.4 Discrete Returns ..... 33
3.2.4.1.2.5 Pulse or Clock Circuit Returns ..... 33

3.2.4.1.2.6 Returns, Signals Below Four Megahertz ..... 33
3.2.4.1.2.7 Signals Equal to or Above Four Megahertz ..... 33
3.2.4.2 Electrical Bonding ..... 34
3.2.4.2.1 Classes of Application ..... 34
3.2.4.2.1.1 Class H Bonding ..... 34
3.2.4.2.1.1.1 Resistance ..... 34
3.2.4.2.1.1.2 Grounding ..... 34
3.2.4.2.1.2 Class R Bonding (High Frequency Potentials, Antenna's) ..... 34
3.2.4.2.1.2.1 Impedance ..... 35
3.2.4.2.1.2.2 Nearby Conductors ..... 35
3.2.4.2.1.3 Class S Bonding (Static Charge) ..... 35
3.2.4.2.1.3.1 Conducting Structural Items ..... 35
3.2.4.2.1.3.2 Composite Materials ..... 35
3.2.4.2.1.3.3 Conductive Mechanical Subassemblies/Parts ..... 35
3.2.4.2.1.3.4 Pipe and Hose Bonding ..... 36
3.2.4.2.1.3.5 Traditionally Homogeneous Structural Materials ..... 36
3.2.4.2.2 Selection of Materials ..... 36
3.2.4.2.3 Standard Parts ..... 36
3.2.4.2.3.1 Jumper/Straps ..... 36
3.2.4.2.3.2 Hardware Usage ..... 37
3.2.4.2.4 Methods of Bonding ..... 37
3.2.4.2.4.1 Bonding Installations ..... 37
3.2.4.2.4.1.1 Semi-Permanent Bonding Applications ..... 37
3.2.4.2.4.2 Bonding Connections ..... 38
3.2.4.2.4.3 Conductive Epoxy Resins ..... 38
3.2.4.2.4.4 Tubular Structural Members ..... 38
3.2.4.2.4.4.1 Conducting Material ..... 38
3.2.4.2.44.2 Low-Conducting Material ..... 38
3.2.4.2.4.5 Dissimilar Metals ..... 38
3.2.4.2.4.6 Refinishing ..... 39
3.2.4.2.4.7 Intermittent Electrical Contact ..... 39
3.2.4.2.4.8 Unapproved Bonding Methods ..... 39
3.2.4.2.5 Bonding Faying surface Preparation ..... 39
3.2.4.2.5.1 Metal-toMetal ..... 39
3.2.4.2.5.2 Nonmetal-to-Nonmetal ..... 39
3.2.4.2.5.3 Metal-toNonmetal ..... 39
3.2.4.2.6 Preparation of Electrical Mating Surfaces ..... 40
3.2.4.2.6.1 Nonconductive Films ..... 40
3.2.4.2.6.2 Nonsoluble Films ..... 40
3.2.4.2.6.3 Surface Treatment ..... 40
3.2.4.2.6.3.1 Magnesium Alloy ..... 40
3.2.4.2.6.3.2 Aluminum Alloy ..... 40
3.2.4.2.7 Use of Sealant ..... 41
3.2.4.3 Cable/Wire Design and Control Requirements ..... 41
3.2.4.3.1 Characteristics ..... 41
3.2.4.3.1.1 Circuit Classification ..... 41
3.2.4.3.1.1.1 Frequency or Rise/Fall Time ..... 41
3.2.4.3.1.1.2 Impedance ..... 41
3.2.4.3.1.1.3 Voltage ..... 42
3.2.4.3.1.1.4 Sensitivity ..... 42
3.2.4.3.1.1.5 Signal Type and Wire Size ..... 42
3.2.4.3.1.2 Classification/Wire Procedure ..... 42
3.2.4.3.1.2.1 Determination of Interface Wiring Requirements ..... 43
3.2.4.3.1.2.1.1 Wire Type ..... 43
3.2.4.3.1.2.1.2 Signal Types Requiring Controlled Impedance Characteristics ..... 43
3.2.4.3.1.2.1.3 Shield Grounding Requirements ..... 44
3.2.4.3.1.2.2 Implementation of Coding and Bundling ..... 44
3.2.4.3.1.2.3 Implementation of Bundle Installation ..... 44
3.2.4.3.1.2.3.1 Physical Isolation of Bundles With different Codes ..... 44
3.2.4.3.1.2.3.2 Seperation Requirements ..... 44

3.2.4.3.1.2.4 Shields ..... 44
3.2.4.3.1.2.4.1 Terminations ..... 44
3.2.4.3.1.2.4.2 Breakouts ..... 45
3.2.4.3.1.2.4.3 Grounding of Radio Frequency Circuit shields ..... 45
3.2.4.3.1.2.4.4 Internal Equipment Shields ..... 45
3.2.4.3.1.2.4.5 Grounding ..... 45
3.2.4.4 Electromagnetic Emission and Susceptibility Requirements ..... 46
3.2.4.4.1 Self-Compatibility ..... 47
3.2.4.4.2 Equipment Emission and Susceptibility Limits ..... 47
3.2.4.4.2.1 Conducted Emissions ..... 47
3.2.4.4.2.1.1 CE01, Conducted Emissions ..... 48
3.2.4.4.2.1.1.1 Applicability ..... 48
3.2.4.4.2.1.1.2 CE01 Limits ..... 48
3.2.4.4.2.1.2 CE03, Conducted Emissions ..... 48
3.2.4.4.2.1.2.1 Applicability ..... 49
3.2.4.4.2.1.2.2 CE03 Limits ..... 49
3.2.4.4.2.1.3 CE07, Conducted Emissions ..... 49
3.2.4.4.2.1.3.1 Applicability ..... 49
3.2.4.4.2.1.3.2 CE07 Limits ..... 50
3.2.4.4.2.2 Conducted Susceptibility ..... 50
3.2.4.4.2.2.1 CS01, Conducted Susceptibility ..... 50
3.2.4.4.2.2.1.1 Applicability ..... 50
3.2.4.4.2.2.1.2 CS01 Limits ..... 50
3.2.4.4.2.2.2 CS02, Conducted Susceptibility ..... 51
3.2.4.4.2.2.2.1 Applicability ..... 51
3.2.4.4.2.2.2.2 CS02 Limits ..... 52
3.2.4.4.2.2.3 CS06, Conducted Susceptibility ..... 52
3.2.4.4.2.2.3.1 Applicability ..... 52
3.2.4.4.2.2.3.2 CS06 Limits ..... 52
3.2.4.4.2.3 Radiated Emissions ..... 53
3.2.4.4.2.3.1 RE02, Radiated Emissions ..... 53
3.2.4.4.2.3.1.1 Applicability ..... 53
3.2.4.4.2.3.1.2 RE02 Limits ..... 54
3.2.4.4.2.3.1.2.1 Narrowband Electric Field Emissions ..... 54
3.2.4.4.2.4 Radiated Susceptibility ..... 56
3.2.4.4.2.4.1 RS02, Radiated Susceptibility ..... 56
3.2.4.4.2.4.1.1 Applicability ..... 56
3.2.4.4.2.4.1.2 RS02 Limits ..... 56
3.2.4.4.2.4.2 RS03, Radiated Susceptibility ..... 56
3.2.4.4.2.4.2.1 Applicability ..... 56
3.2.4.4.2.4.2.2 RS03 Limits ..... 56
3.2.4.4.2.5 Leakage Emissions ..... 57
3.2.4.4.2.5.1 LE01, AC Power User Leadage Current ..... 57
3.2.4.4.2.5.1.1 Applicability ..... 57
3.2.4.4.2.5.1.2 LE01 Limits ..... 57
3.2.4.4.2.6 Testing Requirements ..... 57
3.2.4.5 Electrostatic Discharge ..... 57
3.2.4.6 Alternating Current (AC) Magnetic Fields ..... 58
3.2.4.7 Direct Current (DC) Magnetic Fields ..... 58
3.2.4.8 Deleted ..... 58
*3.2.5 Payload Elecrtical Safety Requirements ..... 58*
3.2.5.1 Mating/Demating Of Powered Connectors ..... 58
3.2.5.2 Safety-Critical Circuits Redundancy ..... 58
3.2.5.3 Power Switches/Controls ..... 58
3.2.5.4 Deleted ..... 59
3.2.5.5 Deleted ..... 59
3.3 COMMAND AND DATA HANDLING REQUIREMENTS ..... 59
*3.3.1 General Requirements ..... 60*
3.3.1.1 Software ..... 60
3.3.1.1.1 Software Protocol ..... 61

3.3.1.1.2 Byte and Bit Order ..... 61
3.3.1.1.3 ESTEC Data Link Format Description Protocol ..... 61
3.3.1.1.4 Command Acknowlegde and Log Messages ..... 62
3.3.1.1.5 Commanding ..... 62
3.3.1.1.6 Health and Status ..... 63
3.3.1.1.7 Safety Data ..... 63
3.3.1.1.7.1 Caution and Warning ..... 63
3.3.1.1.7.1.1 Class 1 Emergence ..... 63
3.3.1.1.7.1.2 Class 2 Warning ..... 64
3.3.1.1.7.1.3 Class 3 Caution ..... 64
3.3.1.1.7.1.4 Class 4 Advisory ..... 64
3.3.1.1.8 File Transfer ..... 65
3.3.1.1.8 Illegal Commands ..... 65
*3.3.2 Deleted ..... 65*
3.3.2.1 Deleted ..... 65
3.3.2.2 Delete ..... 65
*3.3.3 Investigation RS-422 Interface ..... 66*
3.3.3.1 RS-422 Connector/Pin Assignments ..... 66
3.3.3.2 RS-422 Signal Characteristics ..... 67
3.3.3.3 RS-422 Cabling ..... 67
*3.3.4 Investigation Input/Output (I/O) Interface ..... 68*
3.3.4.1 I/O Connector/Pin Assignments ..... 68
*3.3.5 Investigation Ethernet Interface ..... 71*
3.3.5.1 Ethernet Protocol ..... 71
3.3.5.1.1 Investigation Protocols on the Ethernet ..... 71
3.3.5.1.2 Ethernet Address ..... 71
3.3.5.1.3 Ethernet Connectivity ..... 71
3.3.5.1.4 Ethernet Connector/Pin Assignments ..... 71
3.3.5.1.5 Ehternet Signal Characteristics ..... 72
3.3.5.1.6 Ethernet Cable Characteristics ..... 72
3.3.5.1.6.1 Insertion Loss ..... 73
3.3.5.1.6.2 Differential Characteristic Impedance ..... 73
3.3.5.1.6.3 Medium Time Jitter ..... 73
*3.3.6 MSG Laptop Computer (MLC) ..... 73*
3.3.6.1 MLC Data Interface Connector/Pin Assignments ..... 74
3.3.6.1.1 RS-232 Data Port ..... 74
3.3.6.1.2 Parallel Port ..... 75
*3.3.7 Investigation Video Interface ..... 76*
3.4 THERMAL CONTROL INTERFACE REQUIREMENTS ..... 77
*3.4.1 Investigation Thermal Interfaces ..... 77*
3.4.1.1 WV Air Circulation System (ACS) ..... 77
3.4.1.2 WV Coldplate ..... 78
3.4.1.2.1 Investigation Coldplate Mounting Requirements ..... 79
3.4.1.3 Airlock Air Circulation System ..... 81
3.5 VACUUM SYSTEM REQUIREMENTS ..... 83
*3.5.1 Vacuum Exhaust System ..... 83*
3.5.1.1 VES Physical Interface ..... 83
3.5.1.2 Input Pressure Limit ..... 83
3.5.1.3 Input Temperature Limit ..... 85
3.5.1.4 Input Dewpoint Limit ..... 85
3.5.1.5 Acceptable Exhaust Gases ..... 85
3.5.1.5.1 Acceptable Gases-Initial List ..... 85
3.5.1.5.2 External Contamination Control ..... 86
3.5.1.5.3 Incompatible Gases ..... 86
*3.5.2 Vacuum Resource System ..... 86*
3.5.2.1 VRS Physical Interface ..... 86
3.5.2.2 Input Pressure Limit ..... 87
3.5.2.3 VRS Through-Put Limit ..... 87
3.6 PRESSURIZED GAS REQUIREMENTS ..... 87

*3.6.1 Nitrogen Interface Requirements* ..... *87*
3.6.1.1 Nitrogen Physical Interface ..... 87
3.6.1.2 Nitrogen Flow Control ..... 88
3.6.1.3 Nitrogen Interface Design Pressure ..... 88
3.6.1.4 Nitrogen Interface Temperature ..... 88
3.6.1.5 Nitrogen Operational Constraints ..... 88
*3.6.2 Pressurized Gas Bottles* ..... *88*
3.7 ENVIRONMENT INTERFACE REQUIREMENTS ..... 88
*3.7.1 Atmosphere Requirements* ..... *88*
3.7.1.1 Pressure ..... 88
3.7.1.2 Temperature ..... 89
3.7.1.3 Humidity ..... 89
*3.7.2 Illumination* ..... *89*
*3.7.2.1 WV Illumination* ..... *89*
3.7.2.2 Airlock Illumination ..... 89
3.7.2.3 Spotlight Illumination ..... 89
3.7.2.3.1 ICP Outlet Interface Requirements ..... 90
*3.7.3 WV Environment* ..... *93*
*3.7.4 Investigation Use Of Cabin Atmosphere* ..... *94*
3.7.4.1 Active Air Exchange ..... 94
3.7.4.2 Oxygen Consumption ..... 94
3.7.4.3 Chemical Releases ..... 95
3.7.4.4 Cabin Air Cooling ..... 95
*3.7.5 Ionizing Radiation Requirements* ..... *95*
3.7.5.1 Investigation Contained or Generated Ionizing Radiation ..... 95
3.7.5.2 Ionizing Radiation Dose ..... 95
3.7.5.3 Single Event Effect (SEE) Ionizing Radiation ..... 95
3.8 FIRE PROTECTION INTERFACE REQUIREMENTS ..... 95
*3.8.1 MSG WV Monitoring and Detection* ..... *95*
*3.8.1.1 Investigation Fire Detection* ..... *96*
3.8.1.2 Investigation Fire Suppression ..... 96
3.9 MATERIALS AND PARTS INTERFACE REQUIREMENTS ..... 97
*3.9.1 Materials and Parts Use And Selection* ..... *97*
3.9.1.1 Commercial Parts ..... 97
3.9.1.2 Additional Investigation Material Requirements ..... 97
*3.9.2 Cleanliness* ..... *98*
3.10 HUMAN FACTORS INTERFACE REQUIREMENTS ..... 100
*3.10.1 Strength Requirements* ..... *100*
*3.10.2 Habitability* ..... *102*
3.10.2.1 Housekeeping ..... 102
3.10.2.1.1 Closures Or Covers ..... 102
3.10.2.1.2 Built -In Control ..... 102
3.10.2.1.3 One-Handed Operation ..... 102
3.10.2.1.4 Deleted ..... 103
3.10.2.2 Touch Temperature ..... 103
3.10.2.2.1 Continuous/Incidental Contact-High Temperature ..... 103
3.10.2.2.2 Continuous/Incidental Contact-Low Temperature ..... 103
3.10.2.2.3 Acoustic Requirements ..... 103
3.10.2.2.4 Lighting Design ..... 104
*3.10.3 Structural/Mechanical Interfaces* ..... *105*
3.10.3.1 Equipment Mounting ..... 105
3.10.3.2 Unique Tools ..... 105
3.10.3.3 Connectors ..... 105
3.10.3.3.1 One-Handed Operation ..... 105
3.10.3.3.2 Accessibility ..... 105
3.10.3.3.3 Ease of Disconnect ..... 105
3.10.3.3.4 Self Locking ..... 105
3.10.3.3.5 Connector Arrangement ..... 105

3.10.3.3.6 Arc Containment ..... 106
3.10.3.3.7 Connector Proctection ..... 106
3.10.3.3.8 Connector Shape ..... 106
3.10.3.3.9 Fluid and Gas Line Connectors ..... 106
3.10.3.3.10 Coding ..... 106
3.10.3.3.11 Pin Identification ..... 106
3.10.3.3.12 Orientation ..... 106
3.10.3.4 Fasteners ..... 106
3.10.3.4.1 Non-Threaded Fasteners Status Indication ..... 107
3.10.3.4.2 Mounting Bolt/Fastener Spacing ..... 107
3.10.3.4.3 Multiple Fasteners ..... 107
3.10.3.4.4 Captive Fasteners ..... 107
3.10.3.4.5 Quick Release Fasteners ..... 108
3.10.3.4.6 Threaded Fasteners ..... 108
3.10.3.4.7 Over Center Latches ..... 109
3.10.3.4.8 Winghead Fasteners ..... 109
3.10.3.4.9 Fastener Head Type ..... 109
3.10.3.4.10 One-Handed Actuation ..... 109
3.10.3.4.11 Accessibility ..... 109
3.10.3.4.12 Access Holes ..... 109
*3.10.4 Controls and Displays ..... 109*
3.10.4.1 Control Spacing Design Requirements ..... 109
3.10.4.2 Protective Methods ..... 110
3.10.4.3 Noninterference ..... 111
3.10.4.4 Barrier Gusrds ..... 112
3.10.4.5 Recessed Switch Protection ..... 112
3.10.4.6 Position Indication ..... 112
3.10.4.7 Hidden Controls ..... 112
3.10.4.8 Hand Controllers ..... 112
3.10.4.9 Valve Controls ..... 113
3.10.4.10 Toggle Switches ..... 114
*3.10.5 Deleted ..... 115*
3.10.5.1 Stowage Container Contents Restraints ..... 115
3.10.5.2 Stowage and Equipment Containers ..... 116
3.10.5.3 Captive Parts ..... 116
3.10.5.4 Handles ..... 116
3.10.5.5 Handle Location/Front Access ..... 116
3.10.6 Handle Dimensions ..... 116
*3.10.7 Identification Labeling ..... 117*
*3.10.8 Crew Safety ..... 118*
3.10.8.1 Electrical hazards ..... 118
3.10.8.2 Mismatched ..... 119
3.10.8.3 Overload Protection ..... 119
3.10.8.3.1 Device Accessibility ..... 119
3.10.8.3.2 Extractor-Type Fuse Holder ..... 119
3.10.8.3.3 Overload Protection Location ..... 119
3.10.8.3.4 Overload Protection Identification ..... 119
3.10.8.3.5 Automatic Restart Protection ..... 120
3.10.8.4 Sharp Edges and Corners Protection ..... 120
3.10.8.4.1 Holes ..... 120
3.10.8.4.2 Latches ..... 120
3.10.8.4.3 Screws and Bolts ..... 120
3.10.8.4.4 Securing Pins ..... 120
3.10.8.4.5 Levers, Cranks, Hooks, and Controls ..... 120
3.10.8.4.6 Burrs ..... 120
3.10.8.4.7 Lockwire ..... 120
*3.10.9 Payload In-Flight Maintenance ..... 121*
3.10.10 Deleted ..... 121
3.10.11 Egress ..... 121

3.11 Safety ..... 121

**4.0 VERIFICATION ..... 122**

4.1 RESPONSIBILITIES ..... 123
4.2 VERIFICATION METHODS ..... 123
4.2.1 Analysis ..... 123
4.2.2 Test ..... 123
4.2.3 Inspection ..... 124
4.2.4 Demonstration ..... 124
4.3 SAFETY VERIFICATION REQUIREMENTS ..... 124
4.3.1 Flight ..... 124
4.3.2 Ground ..... 124
4.3.3 General ..... 125

**5.0 VERIFICATION APPLICABILITY MATRIX ..... 125**

5.1 PURPOSE ..... 125
5.2 SCHEDULE ..... 135
5.3 REFLIGHT VERIFICATION ..... 135
5.3.1 Reflight Certification ..... 135
5.4 VERIFICATION RESULTS REPORTING ..... 135

APPENDIX A ..... 137
APPENDIX B ..... 141
APPENDIX C ..... 173
APPENDIX D ..... 193
APPENDIX E ..... 197
APPENDIX F ..... 303

# LIST OF FIGURES

FIGURE 1. MSG ISOMETRIC VIEW ....3
FIGURE 2. M6 THREADED FASTENER AND CONNECTOR LOCATIONS ....4
FIGURE 3. DELETED ....12
FIGURE 4. THREADED FASTENER DIMENSIONS ....12
FIGURE 5. LOADING PORT M6 THREADED FASTENER AND GLOVEPORT LOCATIONS ....13
FIGURE 6. WV ELECTRICAL INTERFACE BLOCK DIAGRAM ....16
FIGURE 7. MAXIMUM VOLTAGE RIPPLE (SPECTRAL COMPONENTS)-120 VDC ....18
FIGURE 8. TRANSIENT VOLTAGES -120 VDC ....19
FIGURE 9. FAULT CLEARING & PROTECTION TRANSIENT LIMITS-120 VDC ....20
FIGURE 10. TRANSIENT VOLTAGES FOR ABNORMAL OPERATIONS-28 VDC ....21
FIGURE 11. POWER LINE INHIBIT CIRCUIT ....23
FIGURE 12. PEAK SURGE CURRENT AMPLITUDE VERSUS STEADY-STATE INPUT CURRENT ....26
FIGURE 13. MAXIMUM CURRENT RATE OF CHANGE VERSUS PEAK SURGE CURRENT AMPLITUDE ....27
FIGURE 14. TRIP CHARACTERISITICS-120 VDC POWER OUTLET ....29
FIGURE 15. TRIP CHARACTERISITICS-28 VDC POWER SOURCE ....30
FIGURE 16. CSO6 AND RS02 EQUIPMENT LIMIT ....53
FIGURE 17. ISS EMISSION LIMITS ....55
FIGURE 18. DATA HANDLING SYSTEM BLOCK DIAGRAM ....60
FIGURE 19. DELETED ....65
FIGURE 20. DELETED ....66
FIGURE 21. MSG AIR LOOPS ....78
FIGURE 22. MSG COLDPLATE TEMPERATURE CONTOURS ....80
FIGURE 23. MSG WATER LOOPS ....82
FIGURE 24. MSG TO ISS VACUUM SYSTEM INTERFACE ....84
FIGURE 25. WV FIRE SUPPRESSION PORT ....99
FIGURE 26. ARM, HAND AND THUMB/FINGER STRENGTH ....101
FIGURE 27. TORQUE STRENGTH ....102
FIGURE 28. MINIMAL CLEARANCE FOR TOOL-OPERATED FASTENERS ....108
FIGURE 29. CONTROL SPACING REQUIREMENTS ....111
FIGURE 30. ROTARY SWITCH GUARD ....112
FIGURE 31. VALVE HANDLE - CENTRAL PIVOT TYPE ....113
FIGURE 32. VALVE HANDLE - LEVER TYPE ....114
FIGURE 33. TOGGLE SWITCHES ....115
FIGURE 34. MINIMUM HANDLE DIMENSIONS ....117
FIGURE 35. TYPICAL TEST SETUP FOR MEASURING CONDUCTED EMISSIONS ON DC POWER LINES OR INTERCONNECTING LEADS (CE01 AND CE03) ....161
FIGURE 36. LISN FOR CE07 MEASUREMENT ....162
FIGURE 37. CE07 TEST SETUP ....163
FIGURE 38. CONDUCTED SUSCEPTIBILITY, 30 HZ TO 50 KHZ TYPICAL TEST SETUP (CS01) ....164
FIGURE 39. CONDUCTED SUSCEPTIBILITY, 50 KHZ TO 50 MHZ TYPICAL TEST SETUP (CS02) ....165
FIGURE 40. CONDUCTED SUSCEPTIBILITY, SPIKE PARALLEL INJECTION TEST SETUP (CS06) ....166
FIGURE 41. CONDUCTED SUSCEPTIBILITY, SPIKE SERIES INJECTION TEST SETUP (CS06) ....167
FIGURE 42. TYPICAL TEST SETUP FOR RADIATED MEASUREMENT (RE02) ....168
FIGURE 43. TYPICAL TEST SETUP FOR RADIATED MEASUREMENT ON PORTABLE EQUIPMENT (RE02) ....169
FIGURE 44. RS02 CABLE TEST SETUP ....170
FIGURE 45. TYPICAL TEST SETUP, POWER USER LEAKAGE CURRENT (LE01) ....171
FIGURE 46. LABEL PROCESS ....174
FIGURE 47. MISCELLANEOUS LABEL PLACEMENT EXAMPLE ....178
FIGURE 48. CABLE LABEL EXAMPLE ....180
FIGURE 49. GROUP LABEL EXAMPLE ....184
FIGURE 50. HAZARD IDENTIFICATION LABEL LETTER SIZE ....186

# LIST OF TABLES

TABLE I. INVESTIGATION LAUNCH AND LANDING CONDITIONS ....9
TABLE II CREW-INDUCED LOADS ....10
TABLE III. STEADY-STATE VOLTAGE LIMITS ....17
TABLE IV. RPDA RIPPLE VOLTAGE AND NOISE LIMITS ....18
TABLE V. PRIMARY POWER CONNECTOR CONTACT ASSIGNMENTS ....23
TABLE VI. SECONDARY POWER CONNECTOR (J303) CONTACT ASSIGNMENTS ....24
TABLE VII. SECONDARY POWER CONNECTOR (J325) CONTACT ASSIGNMENTS ....25
TABLE VIII. MAXIMUM REVERSE ENERGY/CURRENT FROM DOWNSTREAM LOADS ....28
TABLE IX. EMC CLASSIFICATION, WIRE TYPE, AND SHIELD ....46
TABLE X. CE01 EMISSION LIMIT ....48
TABLE XI. CE03 EMISSION LIMIT ....49
TABLE XII. CE07 MODE SWITCH TRANSIENTS ENVELOPE ....50
TABLE XIII. CS01 ELECTROMAGNETIC ENERGY INJECTION ....51
TABLE XIV. FIELD EMISSION LIMIT ....54
TABLE XV. RS03 LIMIT LEVELS ....57
TABLE XVI. LET-GO CURRENT PROFILE THRESHOLD VERSUS FREQUENCY ....59
TABLE XVII EDLF PACKET FORMAT ....61
TABLE XVIII. CHARACTER SUBSTITUTION ....62
TABLE XIX. DELETED ....65
TABLE XX. DELETED ....65
TABLE XXI DELETED ....65
TABLE XXII. WV RS-422 CONNECTOR J305 CONTACT ASSIGNMENTS ....66
TABLE XXIIII. WV RS-422 CONNECTOR J311 CONTACT ASSIGNMENTS ....67
TABLE XXIV. RS-422 CABLE CHARACTERISTICS ....67
TABLE XXV. WV I/O CONNECTOR J301 CONTACT ASSIGNMENTS ....69
TABLE XXVI. WV I/O CONNECTOR J319 CONTACT ASSIGNMENTS ....70
TABLE XXVII. ETHERNET CONNECTOR J320 PIN ASSIGNMENTS ....72
TABLE XXVIII. ETHERNET CABLE CHARACTERISTICS ....73
TABLE XXIX SERIAL CONNECTOR PIN ASSIGNMENTS ....74
TABLE XXX PARALLEL CONNECTOR PIN ASSIGNMENTS ....75
TABLE XXXI. VIDEO CONNECTOR CONTACT ASSIGNMENTS ....76
TABLE XXXII. WV ICP CONNECTOR CONTACT ASSIGNMENTS ....91
TABLE XXXIII. ICP OUTLET CONNECTOR CONTACT ASSIGNMENTS ....92
TABLE XXXIV. WV FLUID CONTAINMENT QUANTITIES ....94
TABLE XXXV. INVESTIGATION CONTINUOUS NOISE REQUIREMENTS ....104
TABLE XXXVI. INVESTIGATION INTERMITTENT NOISE LIMITS ....104
TABLE XXXVII. MSG INVESTIGATION REQUIREMENTS MATRIX ....127
TABLE XXXVIII. CHARACTER HEIGHT - 710MM (28 IN) VIEWING DISTANCE ....188
TABLE XXXIV TO BE DETERMINED ITEMS ....303
TABLE XXXV TO BE CONFIRMED ITEMS ....303

This Page Intentionally Left Blank

## 1.0 SCOPE

This Investigation Interface Requirements Document (IIRD) defines and controls required Investigation interfaces for compatibility with the Microgavity Science Glovebox (MSG). The applicability of these requirements will depend upon the characteristics of the integrated MSG Investigation. The interface design requirements outlined in this document are mandatory and may not be violated unless specifically agreed upon in the individual Investigation Interface Control Document (ICD). This document is under the control of the MSG Investigation Integration Team (IIT) and the MSG Integration Level III Configuration Control Board (CCB) will approve any changes or revisions.

This IIRD is the interface design requirements document for Microgravity Science Glovebox (MSG) Investigations. Compliance with the IIRD is mandatory to certify an Investigation for integration into the MSG. This includes the United States Laboratory (USL), Columbus Orbiting Facility (COF), and Multi-Purpose Logistics Module (MPLM). NSTS 1700.7, ISS Addendum, KHB 1700.7, ISS Addendum and NSTS 18798 provide the safety requirements for Investigation design.

The physical, functional, and environmental design requirements associated with Investigation safety and interface compatibility are included herein. The requirements defined in this document apply to ground handling and processing, transportation and on-orbit phases of the Investigation operation. Transportation requirements are specific to the MPLM. The reader is referred to NSTS 21000-IDD-MDK for requirements related to transportation in the Shuttle mid-deck area. The on-orbit requirements have been derived form SSP-57000, Pressurized Payloads Interface Requirements Document. The interface requirements defined herein address the MSG to Investigation interface. Any deviations to the requirements herein must first be approved by the MSG Integration Level III CCB.

### 1.1 Use

This document levies design, interface and safety verification requirements on MSG Investigation developers and/or integrators. These requirements are allocated to an Investigation through the applicability matrix in the unique Investigation Interface Control Document. This document defines the interfaces between the MSG and the Investigation. Paragraphs within this document that say "**the Investigator shall**" indicates that the requirement must be verified. Paragraphs within this document that say " **the Investigator will**" are for design information only. Engineering units and conversions will be per FED-STD-376. Investigations can either use ANSIY14.5M or DIN 7168 to determine tolerances for interface locations.

## 1.2 Configuration Management

This document is under control of the MSG Integration Level III Configuration Control Board (CCB) and the MSG CCB Chairperson must approve any changes or revisions.

## 1.3 Payload Description

The MSG is a rack facility to be accommodated initially in the USL of the ISS. The MSG consists of an International Standard Payload Rack (ISPR, NASDA Version) and associated infrastructure, stowage drawers, rack front panel, and the Core Facility. This IRD will focus primarily on the Core Facility and its associated components, since these components provide direct interface to the Investigations.

The MSG facility provides an enclosed work area for Investigation manipulation and observation. This work area can serve as an environment that is isolated from the manned atmosphere, via negative pressure and constantly circulating air, or as a work area open to the manned atmosphere.

Capabilities of the MSG facility are fully described in the MSG Capabilities Manual, MSFC-HBDK-3051.

Figures 1 through 2 provide various views of the MSG rack and its components. Figure 2 gives the MSG attachment (inserts) and connector locations to aid in the design of the Investigation's cables and hoses.

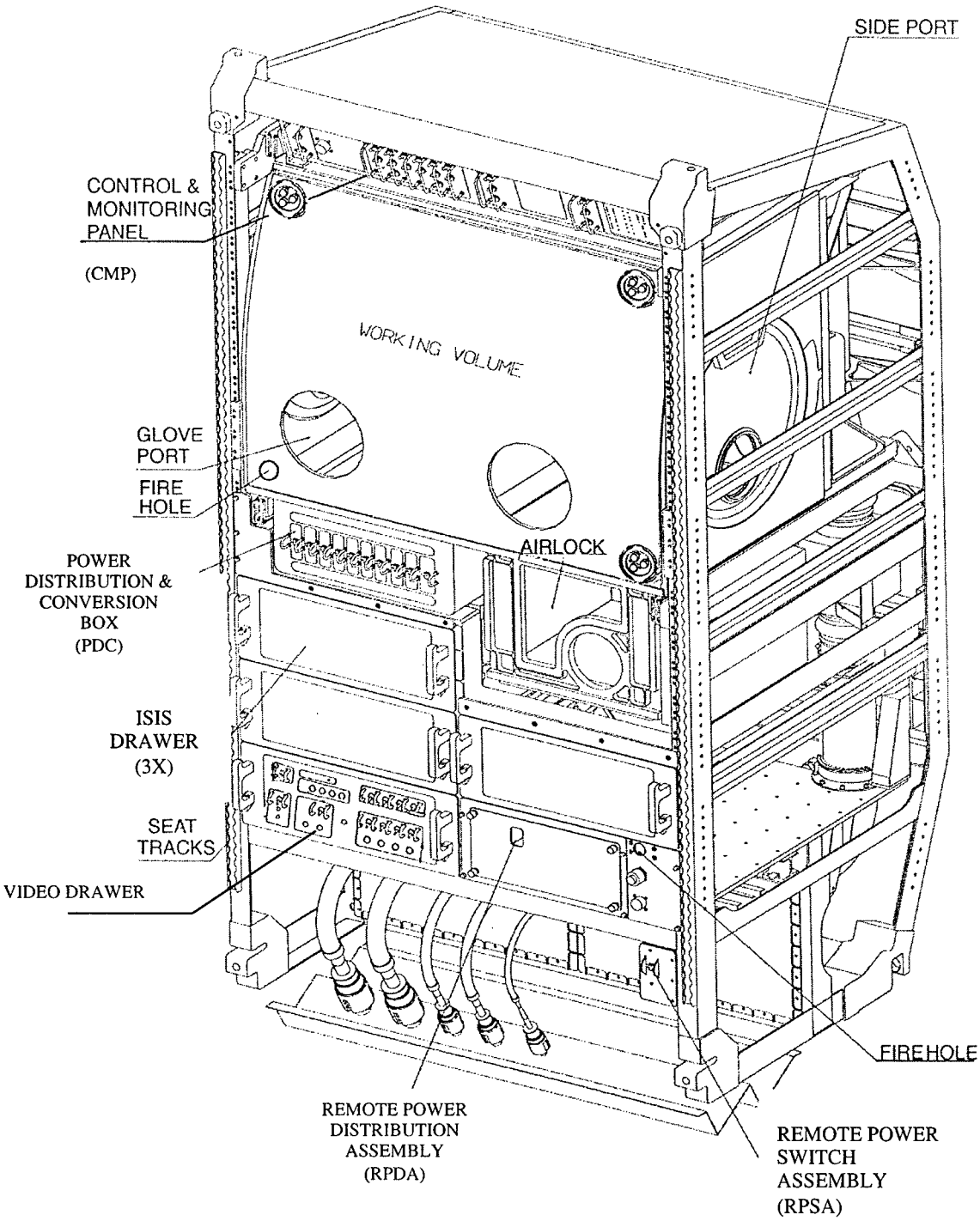


**Figure 1. MSG Isometric View**

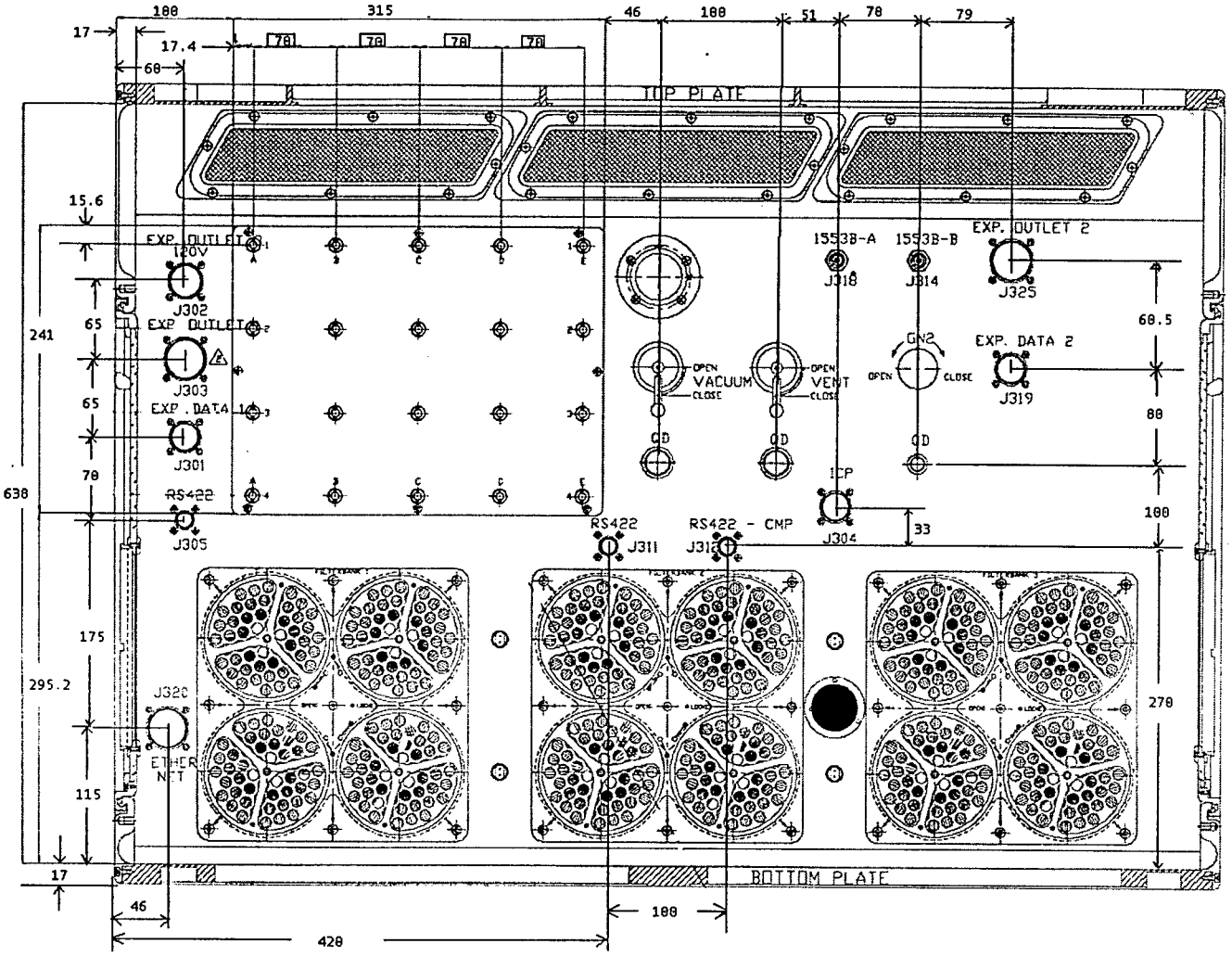


Note:

1) Dimensions are in Millimeters
2) Drawing not to scale
3) Tolerances to DIN 7168 or ANSIY14.5M

**Figure 2. M6 Threaded Fastener and Connector Locations**

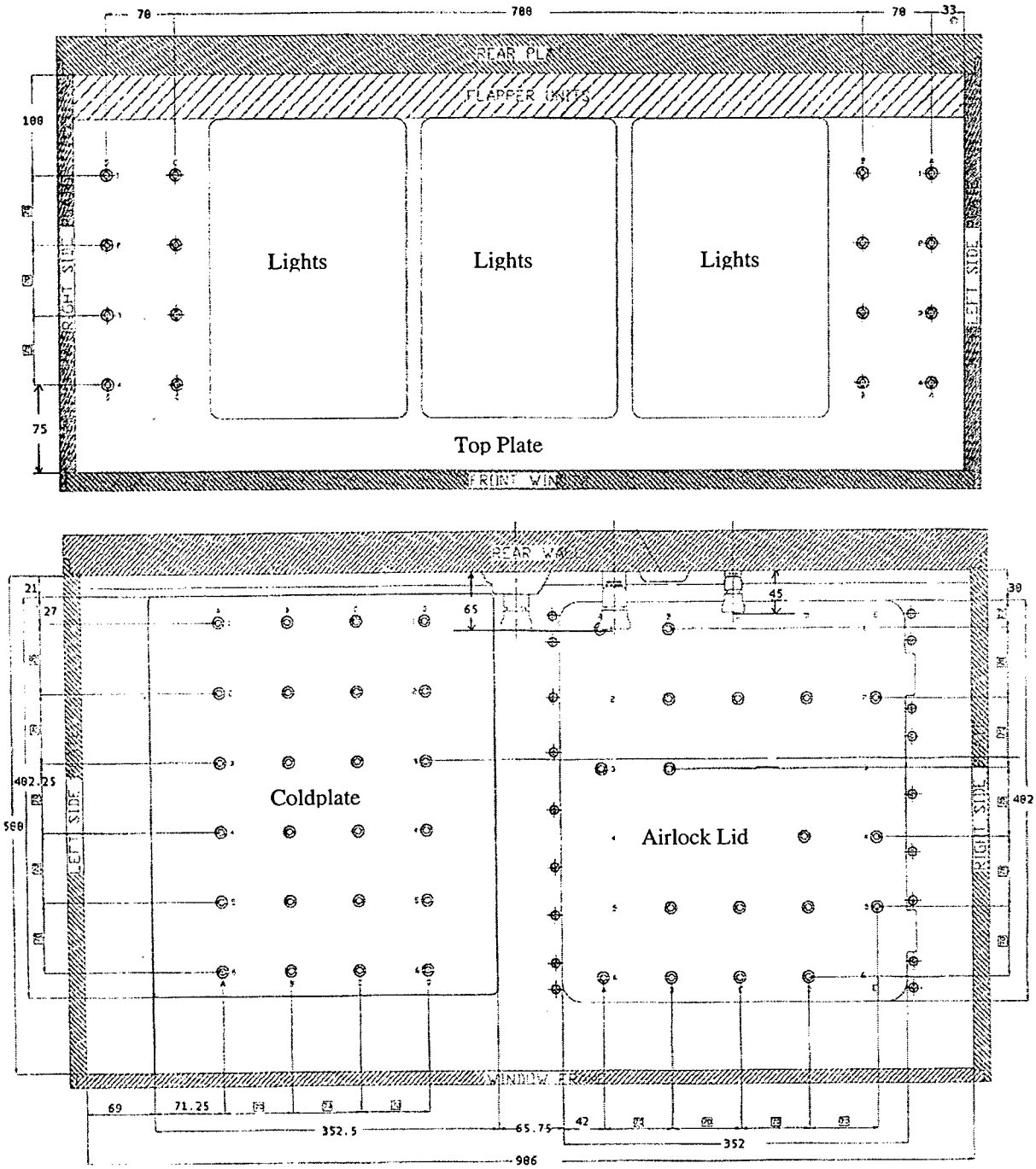


Note:
1) Dimensions are in Millimeters
2) Drawing not to scale
3) Tolerances to DIN 7168 or ANSIY14.5M

**Figure 2.** **M6 Threaded Fastener and Connector Locations (Cont.)**

## 1. APPLICABLE DOCUMENTS

The latest version of the following documents form a part of this document to the extent specified herein. In the event of conflict of requirements between this document and other related project documents, the following order of precedence shall apply: applicable NASA safety requirements, applicable ISS requirements, applicable NSTS requirements, MSG Investigation Interface Requirements Document, and other documents specified herein.

| | |
|---|---|
| FED-STD-209 | Airborne Particulate Cleanliness Classes in Classrooms And Clean Zones |
| FED-STD-376 | Preferred Metric Units for General Use by the Federal Government |
| FED-STD-595B | Federal Standard Colors Used in Government Procurement |
| JSC-36044C | Space Station Mission Operations Acronyms and Abbreviations |
| JSC 27260 | Decal Process Document and Catalog |
| KHB 1700.7 | Space Shuttle Payload Ground Safety Handbook |
| MIL-STD-1553B Notice 2 | Digital Time Division Command/Response Multiplex Data Bus |
| MIL-C-5541 | Chemical conversion coating on Aluminum and Aluminum Alloys |
| MIL-M-3171 | Magnesium Alloys, Processes for Pretreatment and Prevention of Corrosion |
| MIL-STD-1686 | Electrical Discharge Control Program for Protection of Electrical and Electrical Parts, Assemblies and Equipment (Excluding Electrically Initiated Explosive Devices) Document |
| MIL-STD-461 | Electromagnetic Emission and Susceptibility Requirements for Control of Electromagnetic Interfaces |
| MIL-STD-45662A | Calibration Systems Requirements |
| MIL-STD-130G | Identification Marking of U. S. Military Property |

| | |
|---|---|
| MIL-STD-1189 | Standard Department of Defense Bar Code Symbology |
| MSFC-HDBK-3051 | MSG Capabilities Manual |
| MSFC-HDBK-527/ JSC 09694 | Material Selection List for Space Hardware Systems |
| NASA-STD-6001, Test 7 | Flammability, Odor, Offgassing, and compatibility Requirements and Test Procedures for Materials in Environments That Support Combustion |
| NSTS 13830C | Payload Safety Review and Data Submittal Requirements |
| NSTS 1700.7 ISS Addendum | Safety Policy and Requirements for Payloads using the Space Transportation System |
| KHB 1700.7B ISS Addendum | Space Shuttle Payload Ground Safety Handbook |
| NSTS 18798 | Interpretations of NSTS/ISS Payload Safety Requirements |
| NSTS-21000-IDD-MDK | Shuttle/Payload Interface Definition Document for Middeck Accommodation |
| SSP-52050 | Software Interface Control Document Part 1, ISS Payload Rack to ISS |
| SSP-57211 | Microgavity Science Glovebox Interface Control Document |
| SSP-57311 | Microgavity Science Glovebox Software Interface Control Document |
| SSP 30237 | Space Station Electromagnetic Emission and Susceptibility Requirements |
| SSP 50254 | Operations Nomenclature |
| SSQ 21655 | Cable, Electrical, MIL-STD-1553 Data Bus, Space Quality, General Specification for Document |
| SSP 50007 | Bar Code Requirements |
| SSP 41000 | System Specification for the ISS |
| SSP-57000 | Pressurized Payloads Interface Requirements Document |

| | |
|---|---|
| MSFC-PLAN-3052 | MSG Investigation Integration Plan |
| ISO/IEC 8802-3 | Information Technology – Local and Metropolitan Area Networks, formerly known as ANSI/IEEE 802.3 |
| EIA STD RS-232C | Electrical Standards for RS-232 |
| MSG-S/W-IDD-0001 | MSG Software Interface Definition Document |
| MSFC-RQMT-3098 | Software Specification for Microgravity Science Gloveblox Laptop Server Software |
| DIN 7168 | General Tolerances for Linear and Angular Dimensions and Geometrical Tolerances |
| ANSIY14.5M | The Application of Geometric Tolerancing Techniques |
| NSTS/ISS 13830 | Implementation Procedures for NSTS Payloads System Safety Requirements |
| NSTS 07700 | Volume XIV, Attachment 1, (ICD 2-19001), Shuttle Orbiter/Cargo Standard Interfaces |
| JSC 27472 | Requirements for Submission of Data Needed for Toxicological assessment of Chemicals and Biologicals to be Flown on Manned Spacecraft |

# 3.0 INVESTIGATION INTERFACE REQUIREMENTS AND GUIDANCE

The requirements contained in this section will be complied with in order to certify an Investigation for integration into the MSG WV and the ISS USL.

## 3.1 Structural/Mechanical, Microgravity and Stowage Interface Requirements

### 3.1.1 Structural/Mechanical

#### 3.1.1.1 Loads Requirements

a. Investigations will be designed to withstand the launch and landing conditions when stowed in the MPLM or Middeck. For design consideration the Investigation will use the acceleration loads defined in Table I. These loads are based on a worst case condition of the Middeck and MPLM.
It is assumed that the loads imposed by the random vibration environment on stowed items in foam can be neglected in design consideration. The Investigation will conduct a workmanship test, for instance on electrical components or mechanisms, based on the random vibration environment defined in Table I. The Investigation must ensure that the hardware will survive the workmanship random vibration level.

b. Investigations will be limited to ground transportation accelerations of 80% of the flight loads identified in paragraph 3.1.1.1.a of this IRD.

c. Investigations shall be designed to withstand the on-orbit loads of 0.2 Gs acting in any direction.

d. Investigation hardware located outside of the WV shall be designed to maintain positive margins of safety when exposed to (ultimate and yield) the crew-induced loads as defined in Table II.

**Table I. Investigation Launch and Landing Conditions**

| Liftoff | X | Y | X |
|---|---|---|---|
| (g) | ±9.0 | ±11.6 | ±9.9 |
| Landing | | | |
| (g) | ±6.25 | ±7.7 | ±12.5 |

**Table I. Investigation Launch and Landing Conditions Cont.**

| Frequency (Hz) | Amplitude |
|---|---|
| 20 | 0.0005 $G^2$/Hz |
| 20 - 150 | 6.0 dB/octave |
| 150 - 1000 | 0.03 $G^2$/Hz |
| 1000 - 2000 | -6.0 dB/octave |
| 2000 | 0.0075 $G^2$/Hz |
| Composite | 6.5 $G_{rms}$ |

Note: Environment based on worst random vibrations in Space Shuttle mid-deck lockers.

**Table II. Crew-Induced Loads**

| Crew System or Structure | Type of Load | Load | Direction of Load |
|---|---|---|---|
| Levers, Handles, Operating Wheels, Controls | Push or Pull Concentrated on most extreme edge | 50 lbf, limit (222.5 N) | Any Direction |
| Small Knobs | Twist (torsion) | 11 ft-lbf, limit (14.9 N-M) | Either Direction |
| Cabinets and any normally exposed equipment | Concentrated load applied by flat round surface with an area of 1 $ft^2$ (0.1 $m^2$)[1] | 125 lbf, limit (556.4 N) 175 lbf, ultimate (778.9 N) | Any direction |

### 3.1.1.2 Additional Investigation Requirements

a. Investigations shall be limited to a control weight for on-orbit operations of 200 kg (440 lbs). MSG provided equipment in the WV shall be included in this on-orbit weight limit. Investigation control mass shall be documented in the Investigation Increment Specific ICD.

b. Investigations shall be designed to withstand the MPLM depress rate of 890 Pa/sec (7.75 psi/min) and repress rate of 800 Pa/sec (6.96 psi/min).

c. Investigation equipment will be designed not to create a hazard when exposed to the Portable Fire Extinguisher (PFE) discharge.

The WV is not considered a part of containment for rotating parts. The Investigation is required to address any rotating parts during the safety reviews.

### 3.1.1.3 Attachment Provisions

The Investigation shall participate in a physical and functional interface verification of the investigation hardware at least once during the development and integration process per the MSG Investigation Integration Plan, MSFC-PLAN-3052. The last date for accomplishing this interface test is nine months prior to Launch. Investigation size relative to the MSG work volume, may require an earlier fit check to ensure that margins are not compromised. This earlier physical fit check should be accomplished by IIPDR timeframe. These tests will require delivery of the investigation hardware to MSFC. A Customer Agreement is necessary for IIT to process any investigation hardware at MSFC, as described below:

- The Investigation hardware must have either an internal or external customer agreement as appropriate.
- All Investigation hardware must comply with the MSFC policies for product identification and traceability and customer support product agreements.
- A pre-test meeting will be held to review test plans and procedures. Representatives of the Facility manager, IIT, and Quality will attend this meeting.
- Facility test procedures will be run to verify the Facility is ready for integration or testing with Investigation Hardware.
- The Investigations must complete a pre-integration test procedure prior to interfacing with the facility to preclude damage to the Facility.
- Activities required of the Investigation prior to an accessing the Facility includes but is not limited to:
- Verification of CSP tag (if applicable)
- Sharp edge inspection
- Electrical interface

Mounting of Investigation hardware will vary depending on the type of hardware and the location of the hardware within the MSG (i.e. Work Volume or Airlock). Primarily the hardware is mounted using M6 x 1.0 pitch threaded inserts located throughout the WV. These M6 x 1.0 pitch threaded inserts are located in the WV coldplate, airlock lid, top of the WV, side loading ports and on the rear wall of the WV. The location of these inserts is shown in Figures 2 and 5. It is recommended that Investigations using a four hole pattern for attachment that one or two of the holes provide some slop in them.

There are five lengths of M6 fasteners being supplied by MSG to interface with the M6 inserts. The difference in the fasteners is the shank length. The shank lengths provided by MSG are 30 mm, 24 mm, 18 mm, 12 mm and 6 mm. The overall fastener dimensions are detailed in Figure 4. Investigations that plan on using these fasteners shall provide a means of keeping the fastener captive, either physically or operationally.

Investigation provided captive fasteners shall be of type M6 x 1.0 pitch thread with an engagement of 6mm deep.

**Figure 3. Deleted**

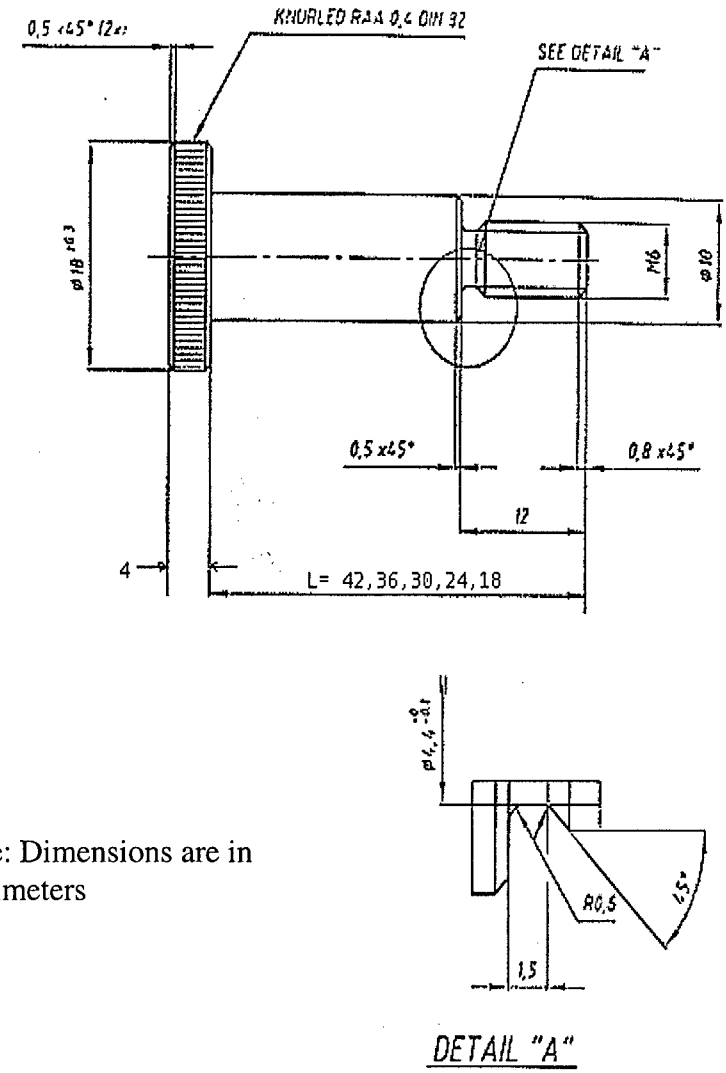


Note: Dimensions are in millimeters

**Figure 4. Threaded Fastener Dimensions**

### 3.1.1.3.1 Bungee Cords

Bungee cords can be used to secure equipment in the WV and to the Airlock tray, used for transferring equipment in and out of the WV. Investigations will provide any bungee cords required for unique methods of attachment. MSG will provide 100mm, 150mm and 200mm length bungee cords.

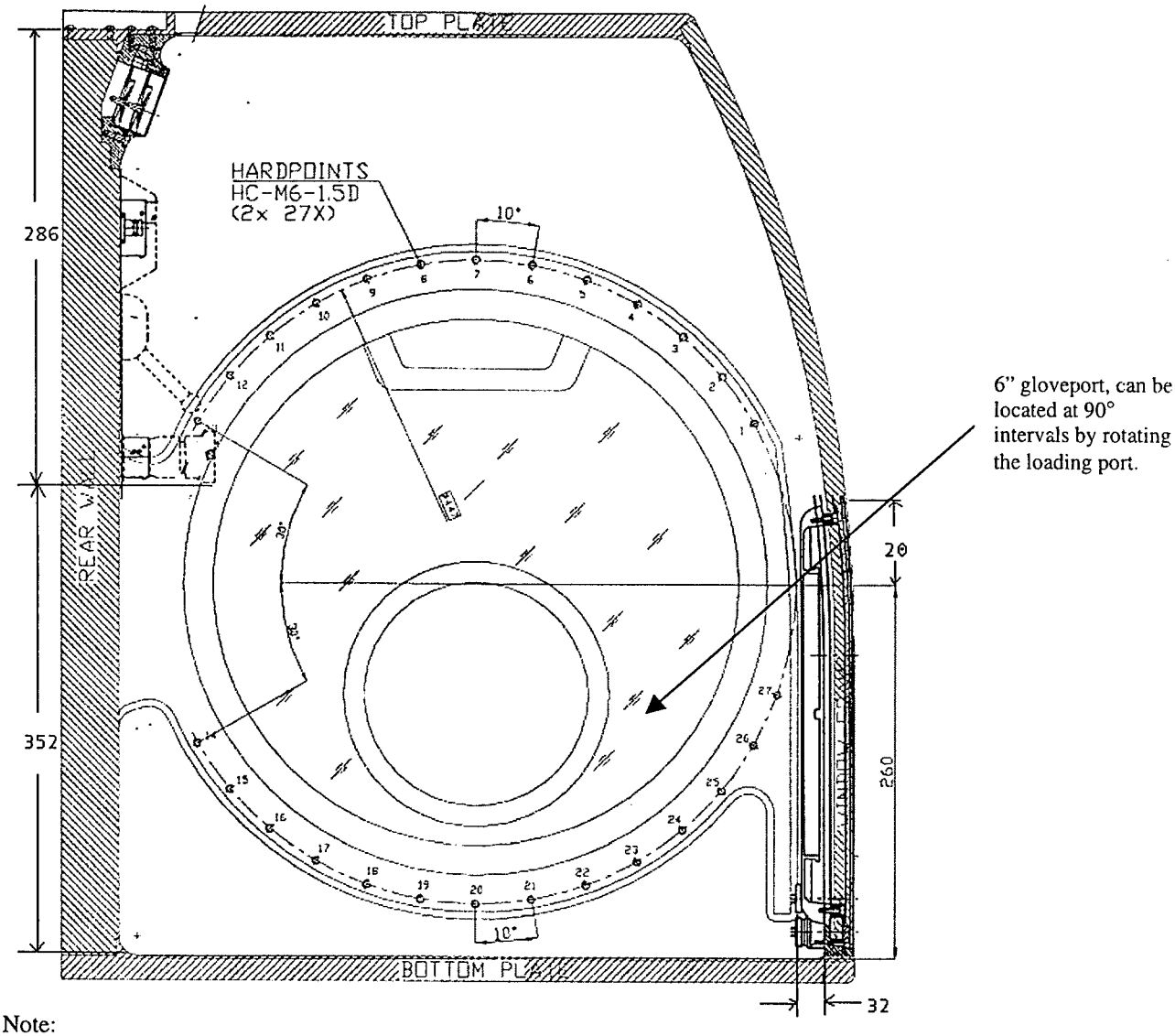


Note:
1) Dimensions are in Millimeters
2) Drawing not to scale
3) Tolerances to DIN 7168 or ANSIY14.5M

**Figure 5. Loading Port M6 Threaded Fastener and Gloveport Locations**

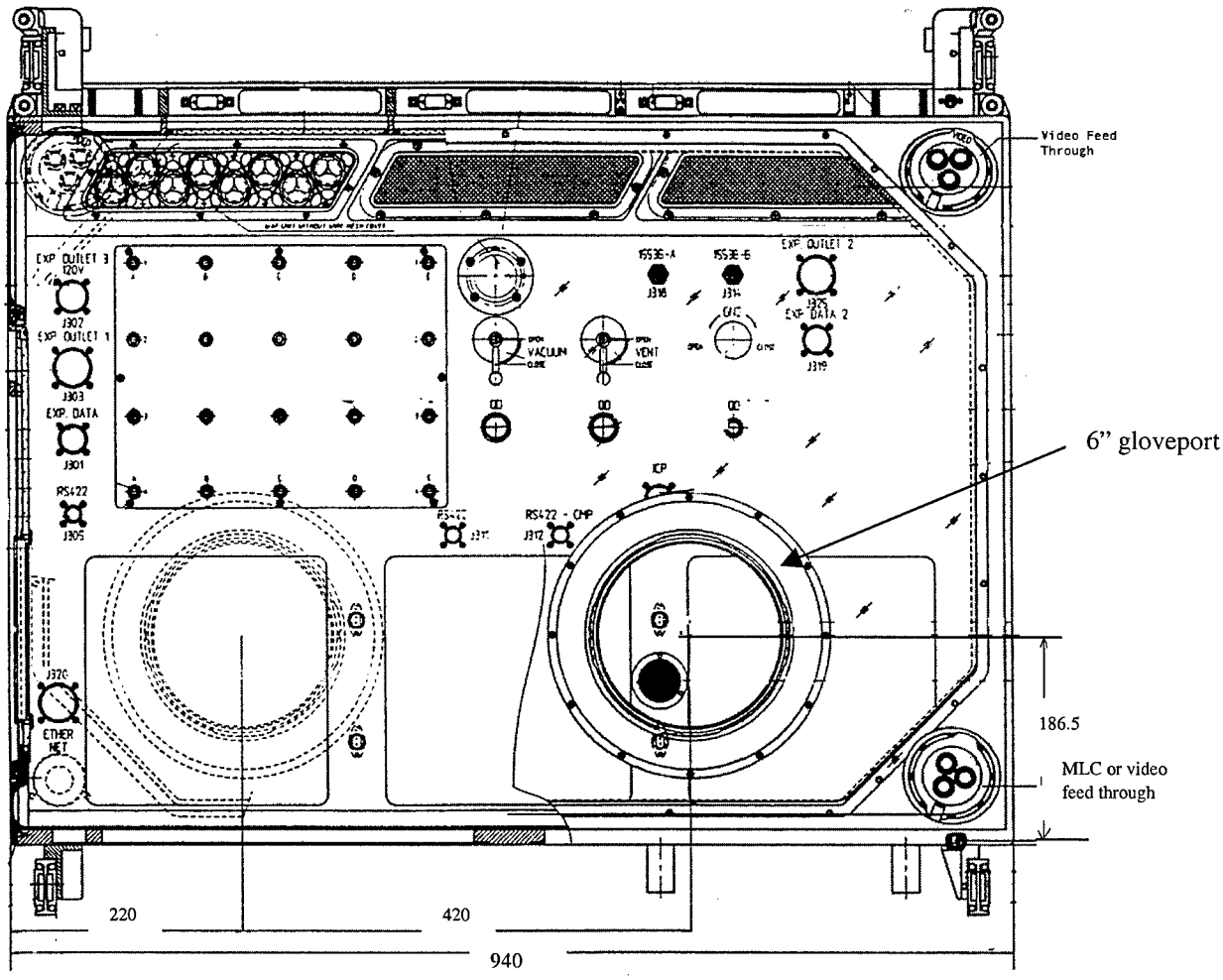


Note:
1) Dimensions are in Millimeters
2) Drawing not to scale
3) Tolerances to DIN 7168 or ANSIY14.5M

**Figure 5. Loading Port M6 Threaded Fastener and Gloveport Locations Cont.**

### 3.1.2 Microgravity

#### 3.1.2.1 Quasi-Steady Requirements

Investigations shall meet the quasi-steady microgravity requirements defined in **TBD #1** table.

#### 3.1.2.2 Vibratory Requirements

Investigations shall limit vibroacoustic disturbances to the limits defined in **TBD #2** Table.

#### 3.1.2.3 Transient Requirements

Investigations shall meet the transient disturbance requirements defined in **TBD#3** Table.

### 3.1.3 Stowage Input Requirements

Investigations requiring individual stowage shall address their requirements for stowage planning. Stowage items requiring Late or Early access, special environmental control or orientation requirements while in stowage will be worked with the MSG Investigation Integration Team (IIT) on a case by case basis. The Investigation's stowage requirements shall be documented in the Unique Investigation ICD.

Investigations shall provide the IIT with engineering sketches or drawings showing the individual hardware items to be stowed dimensions, part number and part name. These drawings will reside in the Unique Investigation ICD and shall be used to determine that the volume allocation in the ICD is not exceeded.

Investigations shall provide the IIT with the mass of each individual hardware item being stowed. The mass of the hardware items shall be included in the Unique Investigation ICD and shall be used to determine that the mass allocation in the ICD is not exceeded. Hardware items weighing greater than 30 lbs (13.6 kg) being stowed in the middeck and 50 lbs (22.7 kg) in the MPLM shall provide center of gravity parameters. Moment of inertia and products of inertia are required for items above 50 lbs.

Any waste/trash generated by the Investigations shall be identified for planning of dedicated handling & treatment.

## 3.2 Electrical Interface Requirements

The MSG receives, conditions, and distributes electrical power from the ISS Electrical Power System (EPS) to the MSG WV for use by the Investigation. The MSG will allocate and control available power as needed to accomplish its mission.

The Investigation is provided a maximum of 1000 W of power inside the MSG WV. The following primary and secondary Investigation power interfaces are provided inside the WV.

- Investigation Primary Power
    - RPDA +120 Vdc Power (120 Vdc, 8.3 A)

- Investigation Secondary Power
    - RPDA +28 Vdc Power, (+28 Vdc, 7 A)
    - RPDA +12 Vdc Power, (+12 Vdc, 2 A)

- RPDA - 12 Vdc Power, (-12 Vdc, 2 A)
- RPDA +5 Vdc Power, (+5 Vdc, 4 A)

It should be noted that the Investigation secondary power sources are converted voltages derived from the DC/DC converters in the Core Facility.

A block diagram showing the WV electrical interfaces is shown in Figure 6.

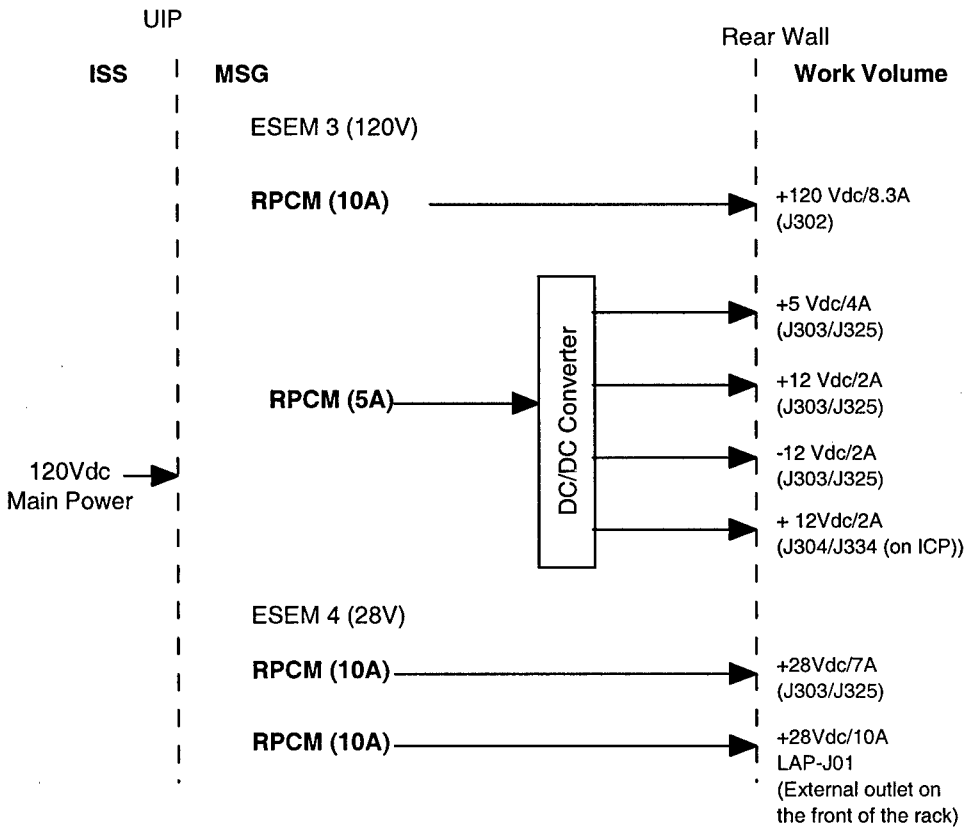


**Figure 6.** **WV Electrical Interface Block Diagram**

### 3.2.1 Electrical Power Characteristics

a. The total power consumption from all Investigation voltages shall not exceed 1000 Watts (i.e. if an Investigation is using 120 volts at 8.3 amps, then none of the other voltages available to the Investigation can be used at that time).

b. The Investigation hardware connected to any of the above power sources shall be compatible with characteristics prescribed herein. "Compatible" is defined as not producing an unsafe condition or one that may result in damage to ISS equipment, the MSG integrated rack, or Investigation hardware.

#### 3.2.1.1 Steady-State Voltage Characteristics

The Investigation Electrical Power Consuming Equipment (EPCE) shall be compatible with steady-state voltage limits defined in Table III.

**Table III. Steady-State Voltage Limits**

| Nominal Voltage | Voltage Range | Current Range | Limit | Power |
|---|---|---|---|---|
| +120 Vdc | RPDA output Voltage Drop on CF~0.4*Iexp | Useable 8.3A | RPDA | 1000 W |
| +28 Vdc | RPDA output Voltage Drop on CF~0.2*Iexp | 0.7 to 7 A | 7A Circuit Breaker | 196 W |
| +12 Vdc | +11.0 to +13.0 Vdc | 0.2 to 2 A | 2A Circuit Breaker | 24 W |
| -12 Vdc | -11.0 to -13.0 Vdc | 0.2 to 2 A | 2A Circuit Breaker | 24 W |
| +5 Vdc | +5.2 to +7.9 Vdc | 0.4 to 4 A | 8A Circuit Breaker (for both 5V feeds) | 40W (if one 5V feed used) |

#### 3.2.1.2 Ripple Voltage Characteristics

##### 3.2.1.2.1 Ripple Voltage and Noise

The Investigation EPCE shall operate and be compatible with the RPDA time domain ripple voltage and noise levels defined in Table IV.

**Table IV. RPDA Ripple Voltage and Noise Limits**

| RPDA Power Source | Ripple Voltage/Noise Level | Frequency Bandwidth |
|---|---|---|
| +120 Vdc | 2.5 $V_{rms}$ maximum | 30 Hz to 10 kHz |
| +28 Vdc | 100 mVpp | ≥50 MHz |
| + 12 Vdc | < 50 $mV_{pp}$ | 1 Hz to 1 MHz |
| -12 Vdc | < 50 $mV_{pp}$ | 1 Hz to 1 MHz |
| +5 Vdc | < 50 $mV_{pp}$ | 1 Hz to 1 MHz |

### 3.2.1.2.2 Ripple Voltage Spectrum

The Investigation EPCE connected to the 120 Vdc WV primary power source shall operate and be compatible with the ripple voltage spectrum as shown in Figure 7.

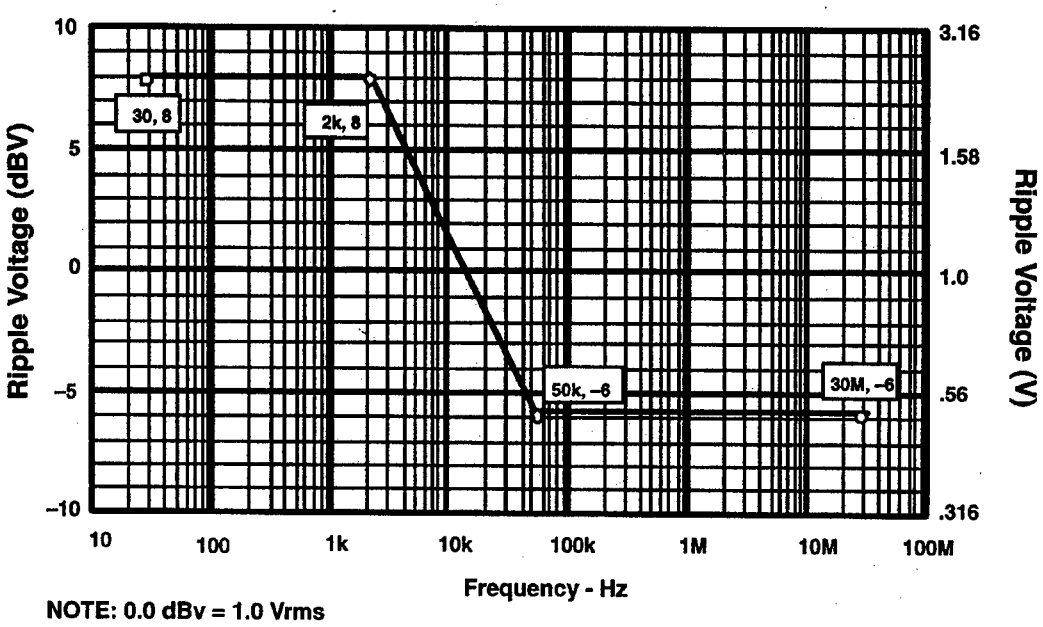


**Figure 7. Maximum Voltage Ripple (Spectral Components)-120 Vdc**

### 3.2.1.3 Transient Voltages

The Investigation EPCE connected to the 120 Vdc WV primary power source shall be compatible with the limits of magnitude and duration for the voltage transients as shown

in Figure 8. The envelope shown in this figure applies to the transient responses exclusive of any periodic ripple and/or random noise components that may be present.

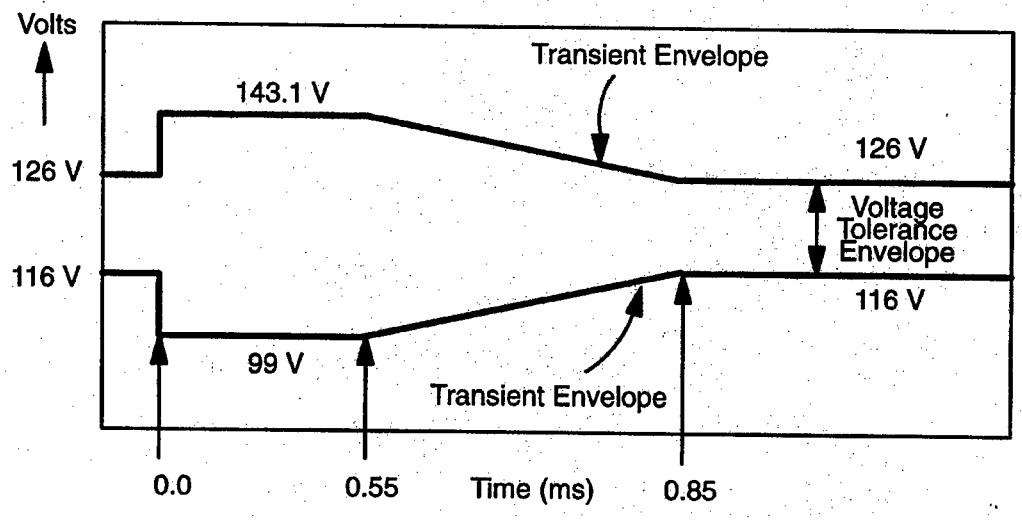


**Figure 8.** **Transient Voltages -120 Vdc**

### 3.2.1.3.1 Fault Clearing and Protection

**a.** The Investigation EPCE connected to the 120 Vdc WV primary power source shall be safe and not suffer damage with the fault clearing and protection transient voltage limits shown in Figure 9.

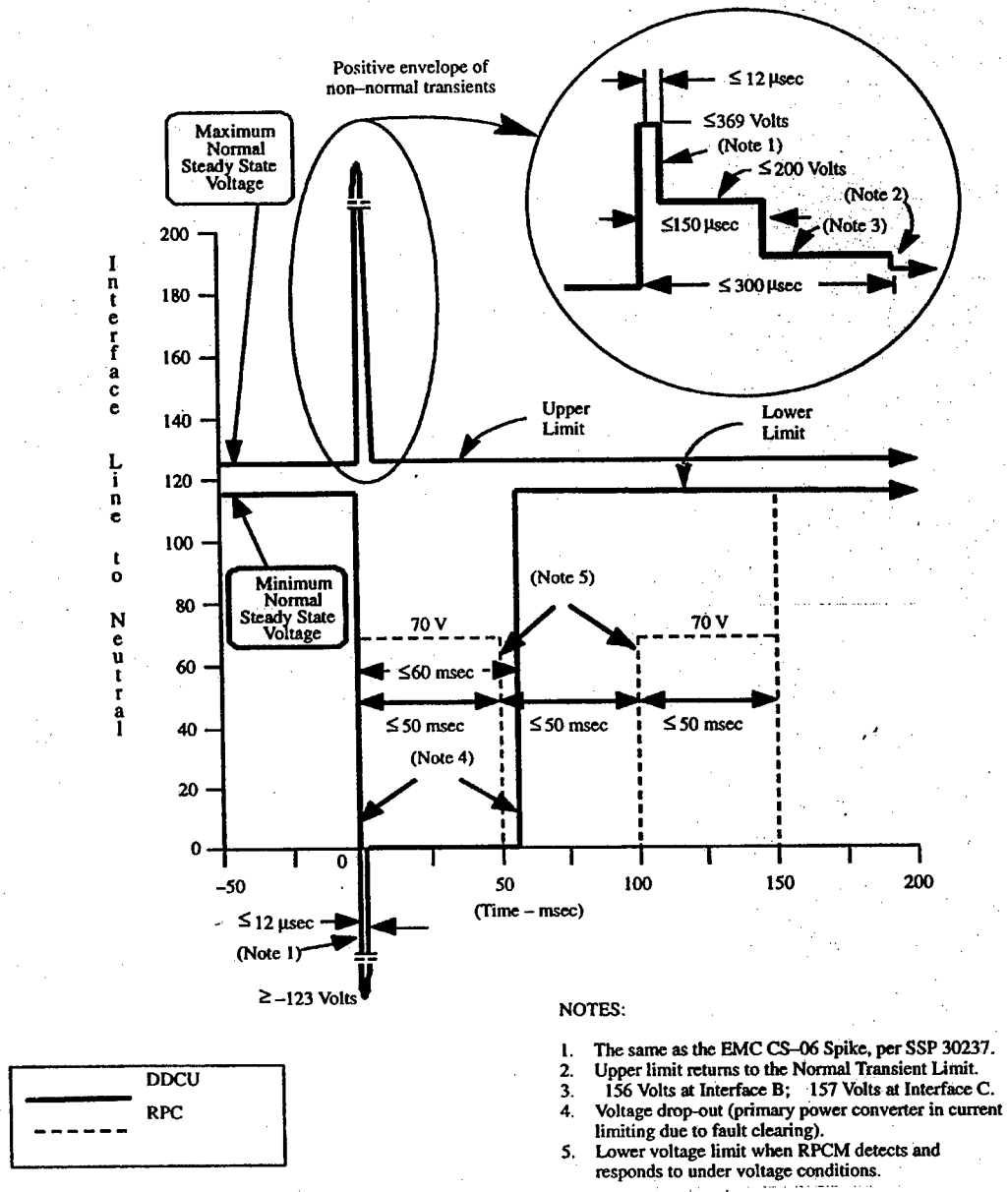


**Figure 9.** **Fault Clearing & Protection Transient Limits-120 Vdc**

b. The Investigation EPCE connected to the 28 Vdc WV secondary power source shall operate and be compatible with the limits of magnitude and duration for the voltage transients as shown in Figure 10.

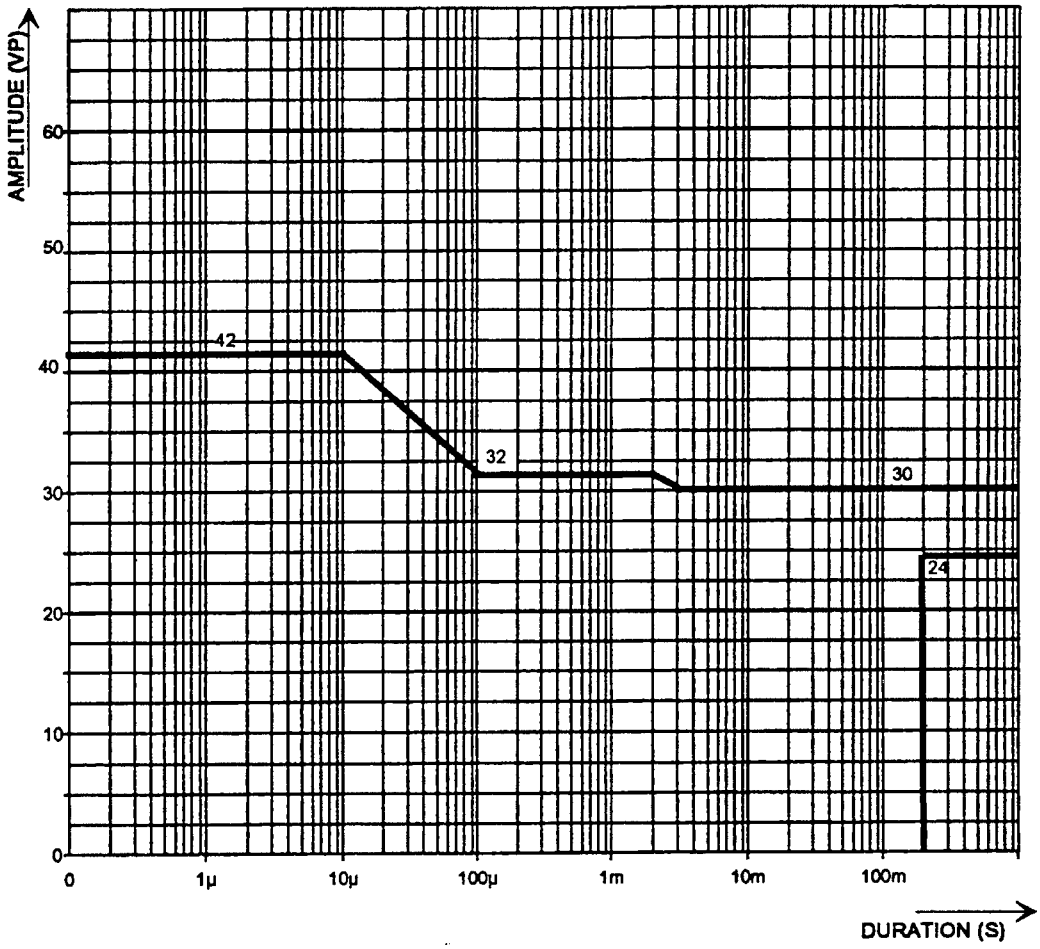


**Figure 10.** **Transient Voltages for Abnormal Operations-28 Vdc**

### 3.2.1.3.2 Non-Normal Voltage Range

The Investigation EPCE connected to the 120 Vdc WV primary power source shall not produce an unsafe condition or one that could result in damage to ISS equipment, MSG equipment or Investigation hardware with the non-normal voltage characteristics:

a. Maximum over-voltage of +165 Vdc for 10 sec.
b. Undervoltage of +102 Vdc for an indefinite period of time.

### 3.2.2 Electrical Power Interface

Investigation primary and secondary power is distributed in the WV. The primary and secondary power is supplied on separate connectors mounted in the WV rear wall. The power outlets can either be activated via the CMP switches or remotely controlled from inside the WV via the ICP.

#### 3.2.2.1 Primary Power Connector

a. The WV Investigation primary power connector (J302) is supplied on a MS27656P17F6SA connector in the WV rear wall as shown in Figure 2. The connector characteristics and contact assignments are listed in Table V. The nominal voltage levels provided via this outlet are the ones available at the UIP reduced by a voltage drop inside the MSG of ~ 1.5VDC (TBC#1) which results in nominal levels between 114.5 to 124.5 VDC.

b. The Investigation provided connector (P302) shall be of type MS27467T17F6PA and shall be compatible with the contact assignments defined in Table V.

c. The primary power connector contains an inhibit circuit via a solid state switch in the CMP (see Figure 11). Contacts D and E shall be bridged inside the Investigation circuitry to assure proper operation of the inhibit. It is required that the investigation place the inhibit link in the connector.

d. To insure a proper bonding path the Investigation shall either use pin F or the bonding requirements in section 3.2.4.2 and subs.

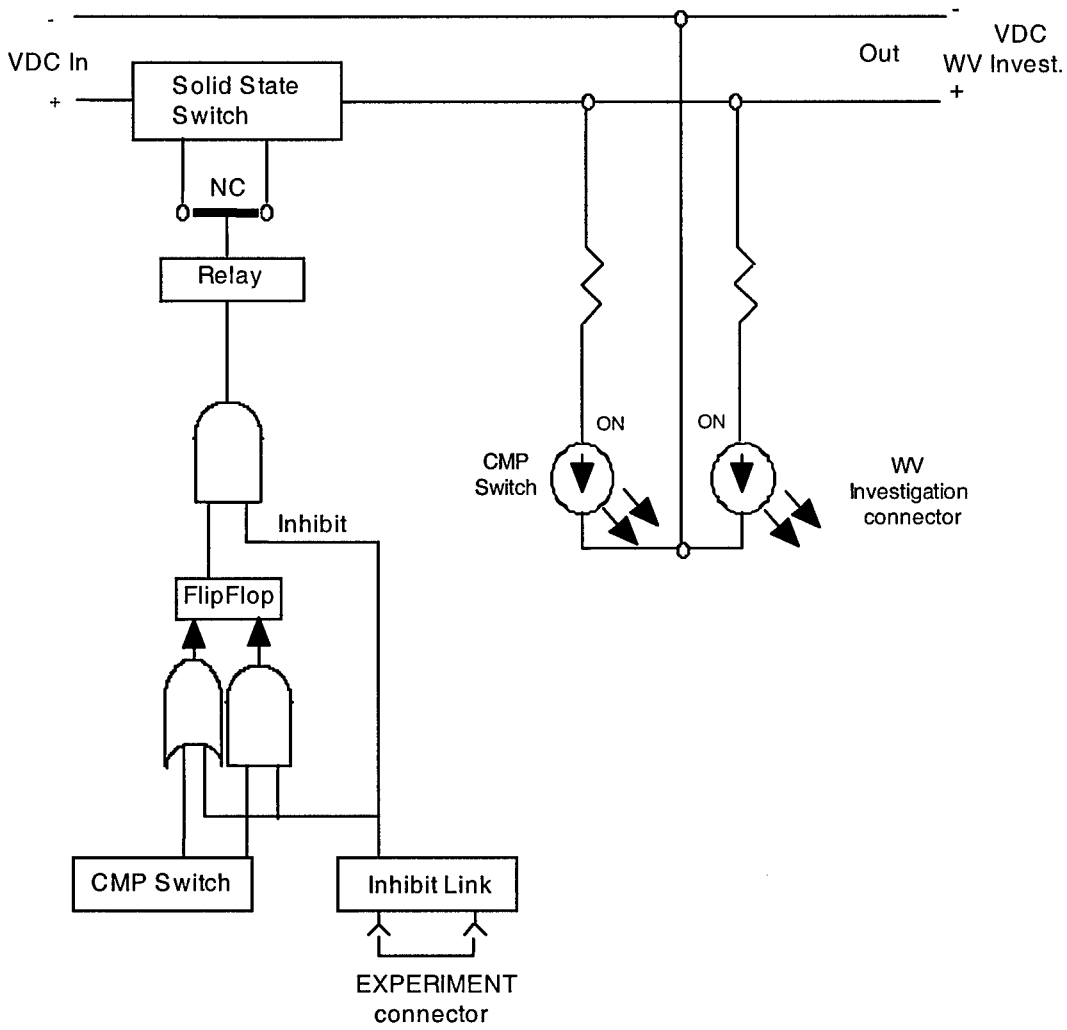


**Figure 11.** **Power Line Inhibit Circuit**

**Table V.** **Primary Power Connector Contact Assignments**

| **Connector Label: J302, Exp. Outlet 3, 120V** | **Connector Type: MS27656P17F6SA** | |
|---|---|---|
| **Contact** | **Contact AWG** | **Function/Description** |
| A | 12 | +120 VDC Primary Power |
| B | 12 | RTN for 120 VDC Primary Power |
| C | 12 | Overall Shield |
| D | 12 | Inhibit J302 |
| E | 12 | RTN for Inhibit J302 |
| F | 12 | Chassis J302 |

### 3.2.2.2 Secondary Power Connector

a. The WV Investigation secondary power connectors (J303/J325) are supplied on two MS27656P21F11S connectors in the WV rear wall as shown in Figure 2. The Investigation is supplied with a 28V outlet (LAP-J01) on the front of the rack located to the left of the PDC box. The connector type and contact assignments are identical to J303 and J325 for the 28V interface. This interface is for the MLC only, the Investigator should refrain from using this interface. The connector characteristics and contact assignments are listed in Tables VI and VII.

b. The Investigation provided connectors (P303/P325/LAP-J01) shall be of type MS27467T21F11P and shall be compatible with the contact assignments defined in Tables VI and VII.

c. The secondary power connectors contains an inhibit circuit via a solid state switch in the CMP (see Figure 11). Contacts H and K shall be bridged inside the Investigation circuitry to assure proper operation of the inhibit. It is required that the investigation place the inhibit link in the connector.

d. To insure a proper bonding path the Investigation shall either use pin L or the bonding requirements in section 3.2.4.2 and subs.

e. Investigations will always apply 20% of the load being applied on the –12V line to the +12V line when using the –12V alone.

**Table VI. Secondary Power Connector (J303) Contact Assignments**

| **Connector Label: J303, Exp. Outlet 1** | **Connector Type: MS27656P21F11S** | |
|---|---|---|
| **Contact** | **Contact AWG** | **Function/Description** |
| A | 12 | +28 VDC Power Secondary 1 |
| B | 12 | RTN 28 VDC Power Secondary 1 |
| C | 12 | + 12 VDC Power Secondary 1 |
| D | 12 | - 12 VDC Power Secondary 1 |
| E | 12 | RTN 12 VDC Power Secondary 1 |
| F | 12 | + 5 VDC Power Secondary 1 |
| G | 12 | RTN 5 VDC Power Secondary 1 |
| H | 12 | Inhibit J303 |
| J | 12 | Shield |
| K | 12 | RTN for Inhibit J303 |
| L | 12 | Chassis J303 |

**Table VII. Secondary Power Connector (J325) Contact Assignments**

| **Connector Label: J325, Exp. Outlet 2** | **Connector Type: MS27656P21F11S** | |
|---|---|---|
| **Contact** | **Contact AWG** | **Function/Description** |
| A | 12 | +28 VDC Power Secondary 2 |
| B | 12 | RTN 28 VDC Power Secondary 2 |
| C | 12 | + 12 VDC Power Secondary 2 |
| D | 12 | - 12 VDC Power Secondary 2 |
| E | 12 | RTN 12 VDC Power Secondary 2 |
| F | 12 | + 5 VDC Power Secondary 2 |
| G | 12 | RTN 5 VDC Power Secondary 2 |
| H | 12 | Inhibit J325 |
| J | 12 | Shield |
| K | 12 | RTN for Inhibit J325 |
| L | 12 | Chassis J325 |

### 3.2.2.3 Surge Current

a. Investigation hardware connected to the 120 VDC WV primary power source available in the WV shall not exceed the surge current limits at the power inputs as defined in Figures 12 and 13. The duration of the surge current will not exceed 10 ms. These requirements apply to all operating modes and changes including power-up and power-down.

b. The protection circuits for the 28 Vdc WV secondary power source accepts load inrush currents of $\leq 2 \times I_{NOM}$ for a duration of $\leq 10$ µs without tripping.

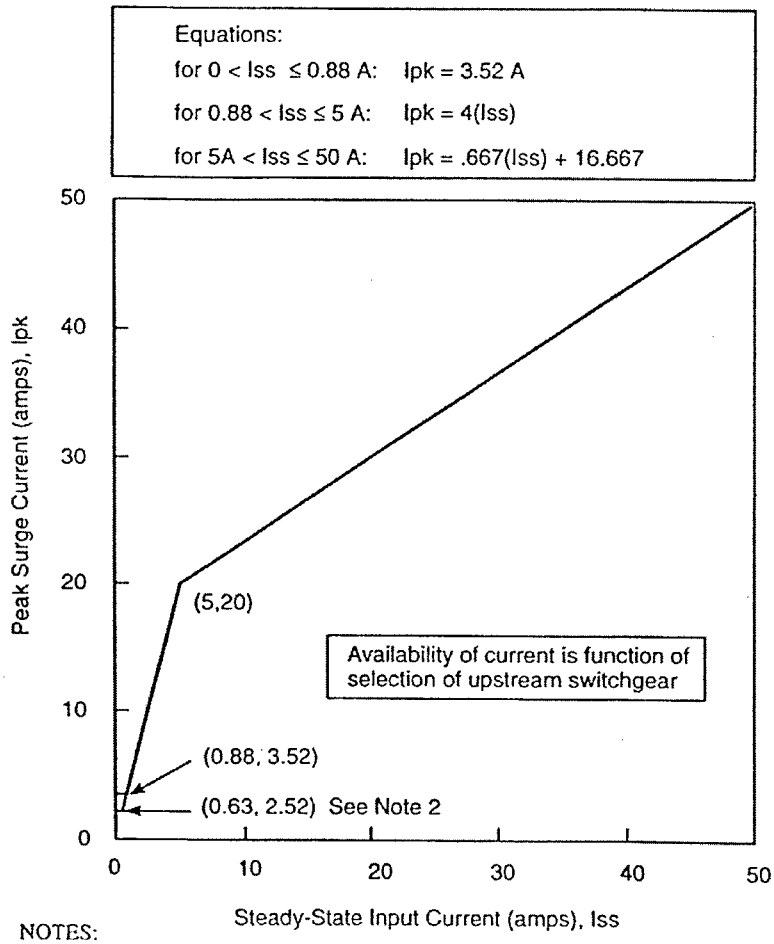


NOTES:

1. For transients less than 100 microseconds, refer to SSP 30237.
2. NASA Space Station equipment accommodated in JEM will have a maximum allowable peak surge current of 2.52 amps for equipment having a steady-state input no greater than 0.63 amps.

**Figure 12.** **Peak Surge Current Amplitude Versus Steady-State Input Current**

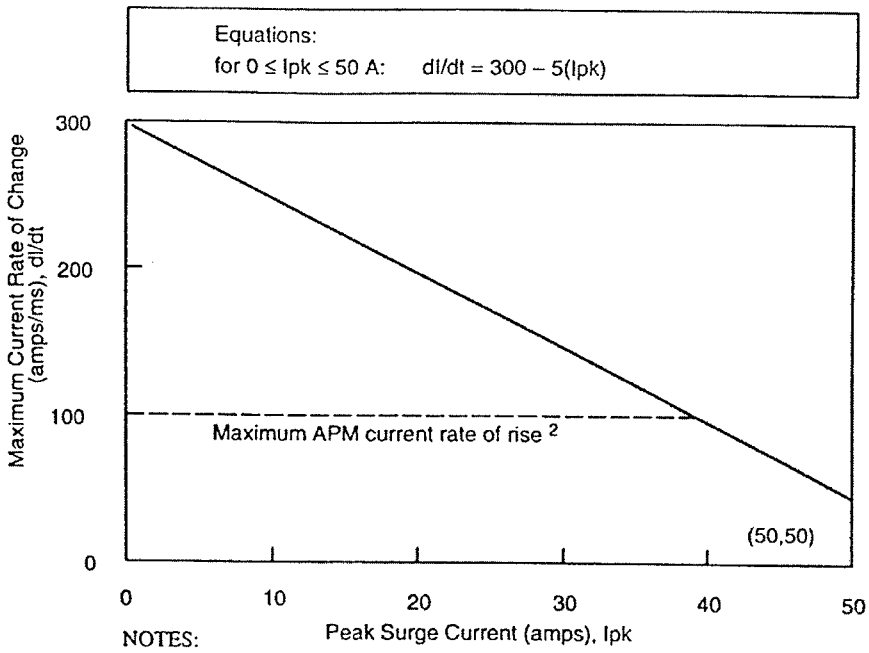


NOTES:

1. For transients less than 100 microseconds, refer to SSP 30237.
2. NASA Space Station and ISPR payload equipment accommodated in APM shall function correctly with a maximum current rate of rise of 100 amps/ms up to 40-amps peak surge current.

**Figure 13. <u>Maximum Current Rate of Change Versus Peak Surge Current Amplitude</u>**

### 3.2.2.4 Reverse Energy/Current

Investigation hardware connected to the 120 Vdc primary power source and secondary power sources available in the WV shall be designed to minimize the reverse energy/current into the upstream source as defined in Table VIII.

**Table VIII. Maximum Reverse Energy/Current From Downstream Loads**

| Primary Power Source (120V) | | | | |
|---|---|---|---|---|
| ISPR Interface Power/RPCM type | Maximum Reverse Energy (Joules) | Maximum Reverse Current (amps) | | |
| | | Pulse $t < 10\ \mu s$ | Peak $t < 1$ ms | Steady State $t > 1$ s |
| 3kW/ type VI | 3.0 | 400 | 250 | 3 |
| | | | | |

| Secondary Power Source | |
|---|---|
| Power Source | Reverse Current |
| +28 Vdc | Not Specified |
| +12 Vdc | 0.3 A maximum |
| -12 Vdc | 0.3 A maximum |
| +5 Vdc | 0.3 A maximum |

### 3.2.2.5 Circuit Protection Devices

The RPDA 120 Vdc output modules provide local and remote over-current protection for the 120 Vdc WV primary power outlets and secondary power outlets. After tripping no automatic reset will be performed.

a. Investigation hardware connected to the 120 Vdc WV primary power source shall be compatible with the trip characteristics for the 120 Vdc power outlet given in Figure 14.

b. Investigation hardware connected to the 28 Vdc WV secondary power source shall be compatible with the trip characteristics of the 28 Vdc WV secondary power source specified in Figure 15.

c. Investigation hardware connected to the 5V secondary power source shall be compatible with a maximum inrush current of 2X nominal operating current for up to 10ms.

d. Investigation hardware connected to the ±12V secondary power source shall be compatible with a maximum inrush current of 2X nominal operating current for up to 10ms.

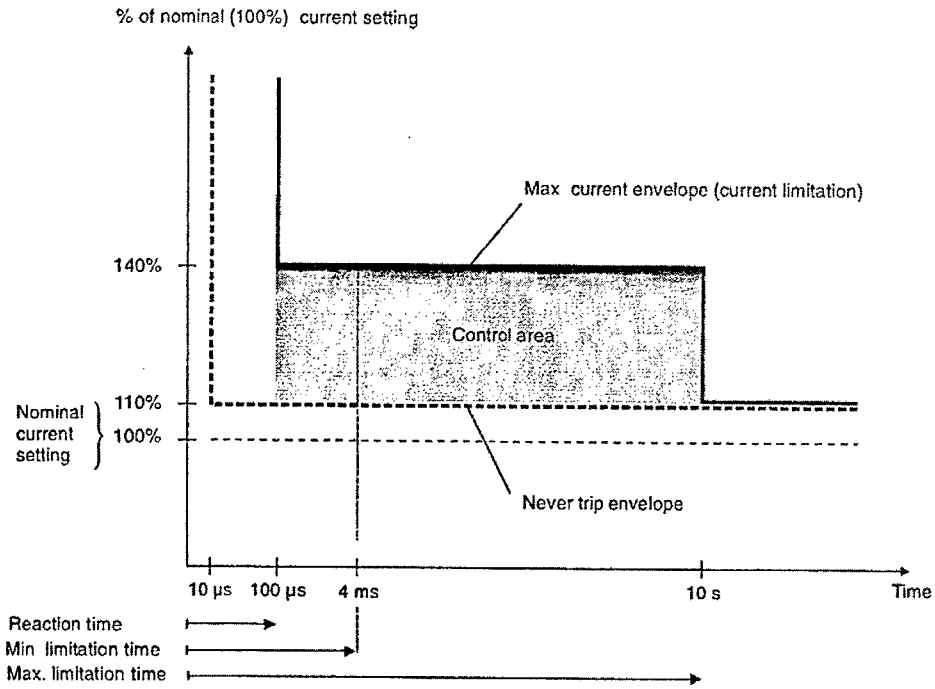


**Figure 14. <u>Trip Characterisitics-120 Vdc Power Outlet</u>**

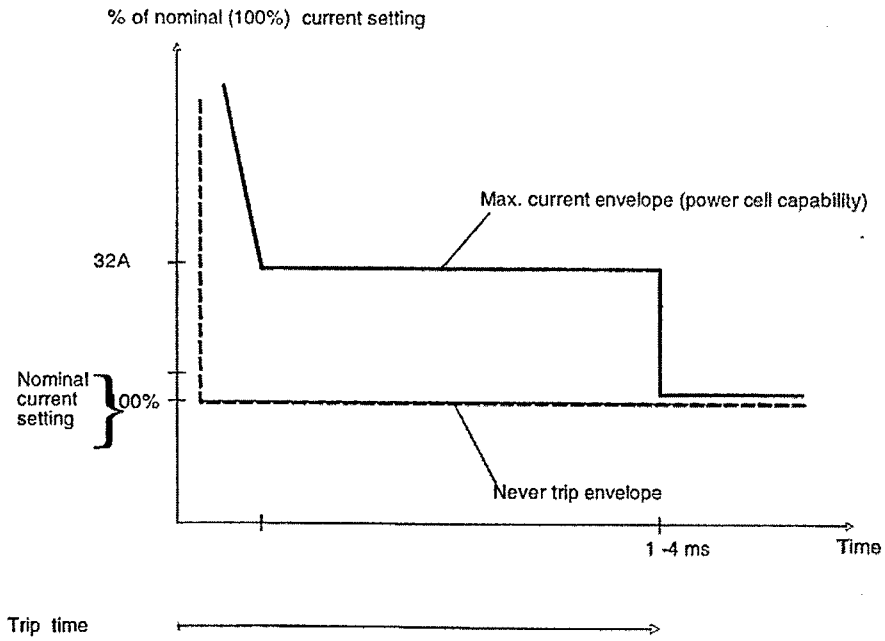


**Figure 15. Trip Characterisitics-28 Vdc Power Source**

### 3.2.2.6 Deleted

### 3.2.2.7 Electrical Load-Stand Alone Stability

An Investigation connected to the RPDA power sources available in the WV shall provide local stability by meeting the following conducted susceptibility requirements:

a. Section 3.2.4.4.2.2.1 (CS01)
b. Section 3.2.4.4.2.2.2 (CS02)
c. Section 3.2.4.4.2.2.3 (CS06)

## 3.2.3 Electrical Power Consumer Constraints

### 3.2.3.1 Wire Derating

Derating criteria for Investigation hardware at and downstream of the RPDA shall be per NASA Technical Memo (TM) 102179 as interpreted by NSTS 18798, TA-92-038.

#### 3.2.3.2 Loss of Power

Investigations shall fail safe in the event of total or partial loss of power regardless of the availability of back-up power in accordance with NSTS 1700.7, ISS Addendum.

### 3.2.4 Electromagnetic Compatibility (EMC)

Investigation hardware shall meet the EMC requirements specified herein.

#### 3.2.4.1 Electrical Grounding/Isolation

a. Investigation hardware connected to the RPDA power sources available in the WV shall be designed to prevent intentional electrical current from flowing in ground references except under fault conditions.

b. The electrical design shall be such that the electromagnetic environment due to grounding is not configuration dependent.

c. Equipment external electrical signal and power grounds shall be dc isolated from each other at the Orbital Replaceable Unit (ORU) level.

d. Each separately derived electrical power source shall be electrically connected to structure at no more than one point.

e. Analog and digital signal grounds external to a system, subsystem, or equipment shall be electrically isolated from each other at the ORU level. Grounding within electrical or electronic equipment is at the discretion of the designer as long as the external power and external signal return isolation requirements are met.

##### 3.2.4.1.1 Electrical Power

For the purpose of this document when referring to primary power this is the MSG 120V interface and when referring to secondary it is the 28V, ±12V and 5V interfaces.

###### 3.2.4.1.1.1 Primary and Secondary Electrical Power

a. The MSG primary and secondary electrical power systems are distributed single point grounded by ISS or MSG. The Investigation shall not ground the primary or secondary returns. Users of power shall be direct current (dc) isolated such that the primary electrical power ground configuration is not dependent on the presence or absence of flight elements, systems, subsystems, equipment, or users.

b. Primary and secondary electrical power shall be dc isolated from chassis, structure, equipment conditioned power return/reference, and signal returns by a minimum of 1 megohm, individually, when grounds are not terminated to chassis or structure.

#### 3.2.4.1.1.2 Tertiary or Converted Electrical Power

a. When grounding tertiary or converted electrical power, Investigation hardware shall be single point grounded.

b. Tertiary or converted electrical power shall be dc isolated from chassis, structure, equipment conditioned power return/reference, and signal circuits by a minimum of 1 megohm, individually, when all grounds are not terminated to chassis or structure.

#### 3.2.4.1.1.3 Control Power Bus Return

The dc power control bus shall be independent of the primary, secondary and tertiary electrical power and shall be referenced to the system reference at a single location.

#### 3.2.4.1.1.4 Isolated Electrical Power Within Equipment

Within equipment, conditioned electrical power shall be dc isolated from chassis and structure except at no more than one electrically conductive common point. Where termination is desired, the equipment designer has the option of either bringing the single point reference external to the equipment for termination to the nearest structure ground or, of terminating the reference point to the chassis internal to the equipment; both methods may be used simultaneously.

#### 3.2.4.1.1.5 Isolated Electrical Power Between Equipment

Where equipment further conditions and isolates electrical power, e.g., for external channel–to–channel isolation or external signal–to–signal isolation, each secondary conditioned power reference shall be treated individually in the same manner as in 3.2.4.1.1.4.

#### 3.2.4.1.1.6 Load Conversion

Where load conversion is done to supply any form of conditioned power to several devices or functions, that conversion shall re–establish a single point reference for the serviced equipment or functions.

### 3.2.4.1.2 Returns

#### 3.2.4.1.2.1 Signal Circuit Return Grounding

Signal circuit conductors shall be dc isolated from chassis, structure, and equipment conditioned power return/reference, by a minimum of 1 megohm, individually, when not

terminated by the signal circuit's single point ground/reference. The 1 megohm requirement will be verified with only one termination lifted at a time. An exception to the 1 megohm requirement for balanced circuits is found in paragraph 3.2.4.1.2.6 An exception for RF signals on coaxial cable is found in paragraph 3.2.4.1.2.7. Under no circumstances shall separate flight elements, assembly elements, systems, subsystems, or equipment depend on other equipment for signal reference or signal return grounding unless they are also dependent upon the other equipment for power.

#### 3.2.4.1.2.2 Alternating Current Power Return

A neutral return wire shall accompany the alternating current input wires to individual equipment loads in the distribution of power.

#### 3.2.4.1.2.3 Analog, Differential Circuit Return

Each differential analog circuit shall employ a separate return.

#### 3.2.4.1.2.4 Discrete Returns

Low–level discrete signals shall use individual returns.

#### 3.2.4.1.2.5 Pulse or Clock Circuit Returns

All digital, pulse, or clock circuits that do not use fiber–optic cabling shall use individual returns.

#### 3.2.4.1.2.6 Returns, Signals Below Four Megahertz

Signal circuits external to Investigation equipment with frequency content below four megahertz shall be balanced and shall be isolated from chassis, structure, and user–conditioned power return/reference by a minimum of 6,000 ohms, individually (i.e., measured per connection, pin, wire, etc.). Otherwise external signals shall be isolated through optical isolators, transformers, etc. All references for circuits with frequencies below 4 MHz shall be single point grounded to conductive structure. Shield connections shall be made to either connector shells or to connector pins that are grounded when mated. Shield treatment is specified in Section 3.2.4.3.

#### 3.2.4.1.2.7 Signals Equal to and Above Four Megahertz

Signals circuits with frequency components equal to or above four megahertz shall use controlled impedance transmission and reception media such as shielded twisted 72–ohm cable, "twin–ax" cable, "tri–ax" cable, or "co–ax" cable. Circuits using "twin–ax" cable shall be balanced and referenced to primary structure at a single point. "Tri–ax" cable shall use the center and inner shield conductors for unbalanced transmission, referenced to primary structure at a single point with the outer shield multipoint grounded as an "overshield". DC isolated, single–ended circuits coupled by coaxial cable with the shield

terminated 360 degrees at each end and at available intermediate point, shall be permitted for signals with the lowest frequency component equal to or above 4 MHz.

### 3.2.4.2 Electrical Bonding

Investigation hardware connected to the RPDA power sources available in the WV shall be bonded such that maximum electrical fault currents can be conducted without creating a thermal or electrical hazard. Electrical bonds between all equipment shall be made to minimize differences in potential.

The material used in the MSG work volume is 7075 aluminum nickel struck.

#### 3.2.4.2.1 Classes of Application

Where a single bond is used to serve two or more classes of application, the design shall conform to the more stringent requirement of bonding. Investigation hardware shall analyze the application of the bond under evaluation and shall apply the class of bond that meets the functional requirements of the device, equipment, structure or interface in question.

##### 3.2.4.2.1.1 Class H Bonding (Shock Hazard )

Class H bonds shall be applied to electrical and electronic equipment, and elements or structure. Class H bonding applies to nonpermanent interfaces such as mobile interfaces or dc power sources.

###### 3.2.4.2.1.1.1 Resistance

Conductive conduit carrying electrical wiring shall have a low resistance bond of less than 0.1 ohm to conducting structure at each termination and breakpoint. The bonding path may be through the equipment at which the conduit terminates.

###### 3.2.4.2.1.1.2 Grounding

Exposed conducting frames or parts of electrical or electronic equipment shall have a low resistance bond of less than 0.1 ohm to conducting structure. If the equipment design includes a ground terminal or pin which is internally connected to exposed parts, a ground connection to the terminal or pin shall be provided.

##### 3.2.4.2.1.2 Class R Bonding (High Frequency Potentials, Antenna's)

A Class R bond shall be applied where electronic devices require a low noise, near equipotential environment, a minimum potential drop or where the bond is part of a safety mandated, high frequency (minimum delay time) function such as fault clearing in the presence of an IVA or EVA.

#### 3.2.4.2.1.2.1 Impedance

All electrical and electronic units or components which use or produce electromagnetic energy shall be installed to provide a continuous low impedance path from the equipment enclosure to the conductive structure. The Investigation shall demonstrate by test or analysis that the proposed bonding method results in a dc resistance of less than 2.5 milliohms across each faying surface in the bond path from enclosure to structure and an impedance of less than 100 milliohms up to a frequency of 1 megahertz. The bond from the equipment enclosure to the mounting plate furnished with the equipment shall also comply with these requirements, except that a suitable ground strap may be used across any necessary vibration isolators or other environment isolators. The impedance of the ground strap (length to width ratio no greater than 5 to 1) is not included in this measurement but the impedance of the faying surface to mating surface of the strap is.

#### 3.2.4.2.1.2.2 Nearby Conductors

All conducting items having any linear dimension of 30 centimeters (cm) or more installed within one–fourth of the wavelength of the highest operating frequency of wiring carrying signals with frequencies that exceed 10 MHz, such as transmitting or receiving antenna lead–ins, shall have a bond to structure at least every interval that is one–fourth the wavelength of the highest operating frequency. Direct metal–to–metal contact is preferred. If a jumper/strap is used, the jumper/strap shall comply with the requirements of Class R bonds.

#### 3.2.4.2.1.3 Class S Bonding (Static Charge )

#### 3.2.4.2.1.3.1 Conducting Structural Items

All isolated structural conducting items having an area greater than 100 square centimeters which carry fluids in motion, or otherwise are subject to frictional charging or plasma–induced current flow or charging, shall have a mechanically secure conducting connection to conductive structure. The resistance of the connection shall be less than 1 ohm.

#### 3.2.4.2.1.3.2 Composite Materials

All composite structural materials which are subject to frictional charging or plasma–induced current flow or charging shall have a mechanically secure conductive connection to adjacent conductive structural items. The dc resistance between the composite material connection and the structure shall not exceed 1000 ohms.

#### 3.2.4.2.1.3.3 Conductive Mechanical Subassemblies/Parts

All moving parts having a surface area greater than 100 square centimeters and which are subject to frictional charging (charging mechanism required), e.g., gears, cams, rotary joints, etc., shall be equipped with a charge bleed–off mechanism. This mechanism may

take the form of bleed wire, wiper strap, conductive lubricant, etc. The bleed–off path shall not exceed 1000 ohms to conductive structure.

#### 3.2.4.2.1.3.4 Pipe and Hose Bonding

All conductive pipes, tubes, and hoses that carry fluids shall have a mechanically secure conductive connection to conductive structure that shall measure 1 ohm or less. The pipe, tube, or hose installation shall not be the primary path for electrical power under normal or fault conditions. Nonconductive plumbing installations shall be designed so that the static voltage generated by fluid flow will not exceed 350 volts at any point outside the pipes, tubes, or hoses.

#### 3.2.4.2.1.3.5 Traditionally Homogeneous Structural Materials

The traditionally homogeneous class of structural materials includes glass, quartz, surface coatings, polymers, plastics, etc. These materials cover a wide range of conductivities. In each case where Class S applies (in all cases where none of the other classifications applies), the bond methodology shall assure that no conductive surface area greater than 200 square cm is without a bond path from conductive layer to conductive structure. The bond resistance from the connection point to conductive structure shall be less than 1 ohm.

#### 3.2.4.2.2 Selection of Materials

Materials and parts for electrical bonding shall be as specified herein. Materials specified in this document shall also be selected in accordance with Section 3.10.

#### 3.2.4.2.3 Standard Parts

Standard parts (MS, AN, or JAN) that comply with the requirements of this document shall be used for electrical bonding wherever suitable for the purpose intended and shall be identified on drawings by part numbers. Commercial standard parts such as screws, bolts, washers, nuts, and cotter pins that comply with the requirements of this document shall be permitted for electrical bonding in place of standard parts (MS, AN, or JAN).

#### 3.2.4.2.3.1 Jumpers/Straps

Bonding jumpers/straps shall be avoided whenever possible. Bonding jumpers/straps across movable vibration or thermal isolation joints shall meet the applicable bond class resistance/impedance requirements. Bonding jumpers/straps shall be kept short and direct and have a length–to–width ratio that does not exceed 5 to 1. Bonding designs that require more than two (2) standard bonding jumpers/straps in parallel shall require approval. Bonding designs that require more then one bonding jumpers/straps in series to provide the required overall length, shall not be permitted.

#### 3.2.4.2.3.2 Hardware Usage

The hardware used shall permit the bond to meet performance requirements over the mission life in the specified environments. Hardware shall comply with the material requirements of the applicable specification. Any coatings requiring refurbishment or maintenance on orbit shall not be used on removable joints. Where the fasteners are used to join two conductive materials that have their surfaces passivated, the fasteners shall provide a penetration of the passivating coatings to meet Class S bonding requirements.

#### 3.2.4.2.4 Methods of Bonding

CRES and titanium are acceptable material for metal–to–metal bonding. A jumper (fault current) / ground strap (Class R), which meets the requirements in Section 3.2.4.2.1.2, across a bond is acceptable as a redundant fault current path. When parallel fault current paths exist for Class R bonds, at least one path shall meet all requirements in Section 3.2.4.2.1.2 using CRES or titanium.

#### 3.2.4.2.4.1 Bonding Installations

Bonding installations are considered to be permanent and inherently bonded when using metal–to–metal joints by welding, bolting, brazing, sweating, or swaging.

#### 3.2.4.2.4.1.1 Semi–Permanent Bonding Applications

Examples of semi–permanent installations are the following:

- Bare metal–to–metal joints of machined surfaces held together by threaded locking devices and sealed
- Sealed metal–to–metal joints held together by a minimum of three threaded locking devices that penetrate insulating surface coatings
- Sealed riveted joints with a minimum of three rivets that penetrate insulating surface coatings. The use of this bond methodology requires analysis of metal relaxation effects on bond viability over the Station lifetime (Class S Bond Application only)
- Tie rods (Class S Bond Application Only)
- Structural wires under tension (Class S Bond Application Only)
- Bare metal–to–metal pinned fittings driven tight and sealed (Class S or H Bond Application only)
- Normally permanent and immovable clamp fittings which have been assembled after insulating finishes have been removed from the contact area and sealed after assembly (Class S Bond Application only).

#### 3.2.4.2.4.2 Bonding Connections

Bonding connections shall be installed so that vibration, expansion, contraction, or relative movement incident to normal service use will not break or loosen the connection to such an extent that the resistance will vary during the movement. Bonding connections shall be located in a protected area, or accessible locations to permit rapid inspection or replacement The following conditions shall also apply:

- Equipment shall be bonded directly to the basic conducting structure or through permanently bonded parts. Bonding of overall shields to the connector backshell is the preferred method.

- Bonding jumpers shall be avoided whenever possible, but if they are utilized, they shall be installed so that movable components are not impeded in their operation by the jumper

- Bonding connections shall not be compression fastened through nonmetallic materials

#### 3.2.4.2.4.3 Conductive Epoxy Resins

The use of conductive epoxy resins on equipment impractical to bond with preferred methods is permitted provided it conforms to the performance requirements of this document.

#### 3.2.4.2.4.4 Tubular Structural Members

#### 3.2.4.2.4.4.1 Conducting Material

Bonding of cylindrical or tubular conducting members not inherently bonded shall be accomplished by a plain clamp with a jumper or approved equivalents. The bond resistance should not be allowed to fluctuate as a result of thermal or mechanical stress and movement. Bonding clamps, when required on flexible metallic conduit or hose, shall be installed so as not to crimp or damage the conduit or hose.

#### 3.2.4.2.4.4.2 Low–Conductivity Material

Low–conductivity materials shall be bonded to provide for static electrical discharges. The bonding resistance shall meet the Class S bond requirements.

#### 3.2.4.2.4.5 Dissimilar Metals

When the joining of dissimilar metals cannot be avoided, the jumpers and other hardware used in the bonding connection shall be selected to minimize the possibility of corrosion. Washers shall not be surface treated or coated in any manner that will impair electrical conductivity. Unprotected, non–stainless steel shall not be used as a washer.

#### 3.2.4.2.4.6 Refinishing

When it is necessary to remove any protective coating on metallic surfaces to conform with this requirements document, the completed assembly shall be refinished. Inspection shall be conducted after refinishing.

#### 3.2.4.2.4.7 Intermittent Electrical Contact

Intermittent electrical contact between conducting surfaces shall be prevented either by bonding or by insulation if bonding is not necessary to conform to this requirements document.

#### 3.2.4.2.4.8 Unapproved Bonding Methods

Antifriction bearings, wire–mesh vibration cushion mounts, or lubricated bushings shall not be used as a bonding path. Piano hinges shall not be used as a bonding path. Chemical conversion coatings shall not be used on internal removable bonding surfaces.

### 3.2.4.2.5 Bonding Faying Surface Preparation

#### 3.2.4.2.5.1 Metal–to–Metal

Surface preparation for an electrical bond shall be accomplished by removing all anodic film, grease, paint, lacquer, or other high–resistance properties from the faying surfaces of the bond to ensure negligible impedance between adjacent metal parts. Abrasives which cause corrosion if embedded in the metal shall not be used. Abrasives or scrapers used to remove any protective finish shall produce a smooth surface without removing excessive material under the protective finish. Chemical cleaning and surface preparation shall be in accordance with the requirements of this document.

#### 3.2.4.2.5.2 Nonmetal–to–Nonmetal

Surface preparation for an electrical bond shall be accomplished by removing protective films, grease, paint, lacquer, or other high–resistance properties from the immediate area to ensure a surface and contact resistance sufficient to meet the requirements of the applicable lower class of bonding. Abrasives or scrapers used to remove any protective finish shall produce a smooth surface without removing excessive material under the protective finish. Chemical cleaning and surface preparation shall be in accordance with the requirements of this document.

#### 3.2.4.2.5.3 Metal–to–Nonmetal

Surface preparation for the metal member shall be as specified in 3.2.4.2.5.1 for metal–to–metal surfaces. Surface preparation for the nonmetal member shall be as specified in 3.2.4.2.5.2 for nonmetal–to–nonmetal surfaces.

### 3.2.4.2.6 Preparation of Electrical Mating Surfaces

The following procedures shall be used in the preparation of metals for electrical mating surfaces.

#### 3.2.4.2.6.1 Nonconductive Films

Grease, oil, or other nonconductive films shall be removed with a cleaning agent which will remove the film without damaging the underlying metal or adjacent surfaces, including protective coatings.

#### 3.2.4.2.6.2 Nonsoluble Films

Nonsoluble films shall be removed by sanding and polishing, using caution so as not to remove excessive metal. The area shall be cleaned.

#### 3.2.4.2.6.3 Surface Treatment

After cleaning, the following substrate specific surface treatments shall be used:

##### 3.2.4.2.6.3.1 Magnesium Alloys

Magnesium alloys shall not be used except in areas where minimal exposure to corrosive environments can be expected and protection systems can be maintained with ease and high reliability. Magnesium alloys shall not be used in the primary structure, or in other areas subject to wear, abuse, foreign object damage, abrasion, erosion, or at any location where fluids or moisture entrapment is possible. When used, magnesium alloys shall be treated as follows:

a. Wash the bare metal areas with a corrosion protection solution conforming to Type 1 of MIL–M–3171 for one minute and then thoroughly rinse with clean water within 5 seconds.

b. Dry thoroughly prior to organic finish repair, sealing, or assembly, as required to meet the performance requirements of 3.2.4.2.1.1, 3.2.4.2.1.2, or 3.2.4.2.1.3.

##### 3.2.4.2.6.3.2 Aluminum Alloy

For nonremovable bonding surfaces, aluminum alloys shall be treated as follows:

a. After polishing mating surfaces, apply a chemical conversion coating conforming to Class 3 of MIL–C–5541.

b. Dry thoroughly prior to organic finish repair, sealing, or assembly, as required to meet the performance requirements of 3.2.4.2.1.1, 3.2.4.2.1.2, or 3.2.4.2.1.3.

c. For internal removable bonding surfaces, plated metallic finishes are required. Selective or capsule plating of nickel is preferred, with adequate corrosion protection provided to counteract the dissimilar metal couple created. Nickel plated aluminum is an acceptable substitute for meeting requirement.

#### 3.2.4.2.7 Use of Sealant

For Class S bonds, the use of sealant which meets the requirements of material usage environments, such as BMS 10–79 and RTV–142, is acceptable for meeting the requirements in 3.2.4.2.6.3.2 (assuming the DC resistance value meets the requirement in 3.2.4.2.1.3.1).

### 3.2.4.3 Cable/Wire Design and Control Requirements

The following information is provided to the investigator for the reduction of electromagnetic effects in the wiring. This can be accomplished by isolating incompatible circuits via wire cable bundling, routing, shielding, separation, and wire treatment requirements presented herein.

#### 3.2.4.3.1 Characteristics

#### 3.2.4.3.1.1 Circuit Classification

The following criteria will be applied to determine the appropriate circuit classification for each circuit.

##### 3.2.4.3.1.1.1 Frequency or Rise/Fall Time

For Table IX, EMC Classification, Wire Type, and Shield Grounding classification purposes, the fundamental component of steady state operation will determine the frequency of the circuit unless the rise/fall time (pulsed wave forms) is less than 10 microseconds. If the rise/fall time is less than 10 microseconds and the voltage is less than 6 volts, the circuit shall be classified as Radio Frequency (RF) regardless of the fundamental frequency. Power circuits which are switched on and off will be classified as HO or EO even if their rise/fall times are less than 10 microseconds.

##### 3.2.4.3.1.1.2 Impedance

The actual impedance of the interconnecting circuit, i.e., the complex "Z" that includes resistance, inductance and capacitance, will be used to classify the source and load impedances using Table IX. These source and load impedances determine the magnetic and electric field coupling mode category. The equivalent circuit pickup resistance, i.e., the sum of the load and equivalent reactive/resistive components, will be used to identify potential areas for magnetic or electric field coupling.

#### 3.2.4.3.1.1.3 Voltage

The maximum peak–to–peak voltage appearing at the source of each circuit will be used to determine the circuit classification using Table IX.

#### 3.2.4.3.1.1.4 Sensitivity

If the interface circuit is susceptible to magnetic or electric field coupling that can cause induced noise with amplitudes less than the source voltage that will affect measurement and/or conversion accuracy, circuit classification will be based upon circuit sensitivity considerations rather than upon frequency, rise/fall time, impedance, or voltage. Circuits assigned a classification based on sensitivity rather than on source voltage will be identified on all wiring diagrams containing such circuits.

#### 3.2.4.3.1.1.5 Signal Type and Wire Type

Table IX describes the classification of signal types and required wire type to control cable coupled interference. Cable and wire treatment will be based on Table X and the wire/cable and isolation requirements.

### 3.2.4.3.1.2 Classification/Wiring Procedure

The following requirements will be applied to determine the classification of wiring treatment and installation of all interface circuit types:

STEP 1. Circuit Classification

To determine the appropriate classification, the parameters of each subsystem equipment interface circuit will be considered in the following order: (1) frequency or rise/fall times, (2) impedance, (3) voltage, and (4) sensitivity. Classification criteria are specified in Table X. This classification will appear on all wiring diagrams in which the circuit appears.

STEP 2. Determination of Interface Wiring Requirements

The appropriate wiring treatment will be assigned to each circuit as required by the classification considerations applied in STEP 1. The wire type, twisting, shielding, and shield grounding requirements will be reflected on all schematics, wiring diagrams, and Interface Control Documents in which the circuit appears.

STEP 3. Bundling of All Coded Circuits

Circuits having different circuit classifications or redundancy codes and routed in the same area will not be commonly bundled but may be routed in a common connector if a 20–dB coupling margin is maintained. Each bundle will be coded with a bundle code

which is the same as the circuit classification of the circuits which it contains. Each bundle classification will be designated on drawings in which the bundle appears.

STEP 4. Redundancy Requirements

In cases where wiring redundancy is a requirement, separate cable bundles will be formed. Such bundles will be coded with the circuit classification code, plus a numeric designator code to identify the redundancy classification: ML–1, ML–2, EO–1, EO–2, etc.

STEP 5. Installation of Bundles

Cables, wires and cable/wire bundles will be locate and routed to provide a 20 dB cable to cable coupling loss using physical or electrical separation and considering the worst case steady state transient conditions. Minimum edge–to–edge bundle separation requirements (in inches) for parallel runs of L feet will be calculated. Separation requirements will be determined by redundancy requirements or calculations based on analysis of signal and power parameters, circuit sensitivities, wire/cable design, etc., whichever is greater.

#### 3.2.4.3.1.2.1 Determination of Interface Wiring Requirements

The following criteria will be used to determine the wiring requirements for each circuit.

##### 3.2.4.3.1.2.1.1 Wire Type

The categorization of each circuit in terms of frequency, impedance, voltage and/or sensitivity to assure proper EMEEC classification will permit the selection of wire type as specified in Table IX. The wire types given in Table IX are general in nature and do not alleviate the responsible design groups from specifying the wire size, allowable capacitance, and attenuation characteristics. Specific details on selected wire types will be included in applicable procurement specifications and assembly drawings.

##### 3.2.4.3.1.2.1.2 Signal Types Requiring Controlled Impedance Characteristics

Serial digital, data bus, video, and clock circuits operating below 4 megahertz (MHz) will use controlled impedance wiring. RF circuits, including clock or data circuits with signal content of 4 MHz or above, will use fiber–optic, twinaxial or triaxial cable to maintain the requirements for isolation and single point references. Coaxial cable will be permitted for signals with frequency content above 4 MHz where dc isolation is maintained.

#### 3.2.4.3.1.2.1.3 Shield Grounding Requirements

Shields shall be terminated at both ends and at intermediate break points directly to structure or chassis, through connector backshells or direct wire connection per the methodology specified in Section 3.2.4.3.1.2.4.

#### 3.2.4.3.1.2.2 Implementation of Coding and Bundling

All circuits routed together in a bundle will be of the same classification. Circuits classified by sensitivity will be analyzed to determine if the source voltage will be detrimental to other circuits in the bundle and if it is necessary to isolate such circuit wiring from other wires in the classification.

#### 3.2.4.3.1.2.3 Implementation of Bundle Installation

The bundles which have been formed and coded will be installed using the following requirements to provide the required electrical isolation between different signal levels.

#### 3.2.4.3.1.2.3.1 Physical Isolation of Bundles With Different Codes

Each bundle type will be physically isolated from all other bundles of a different bundle code. This separation provides electromagnetic coupling isolation between unlike bundles and circuits carrying different redundancy codes.

#### 3.2.4.3.1.2.3.2 Separation Requirements

Each bundle type of one code will be physically separated from other bundles to meet the 20–dB isolation requirement of Section 3.2.4.3.1.2. Metallic channel separation will be permitted in lieu of physical separation, provided that the channel separator height is no less than the largest cable bundle diameter requiring separation and that analysis shows that the channels provide the required 20–dB isolation. The application of such metallic barriers in lieu of physical separation will be identified on all wiring diagrams containing these circuits. Cable bundle placement in all wire trays will also be determined using minimum–to–maximum voltage or sensitivity requirements of Table IX, e.g., EO and RF cable bundles will have maximum separation in the placement of adjacent wire bundles.

#### 3.2.4.3.1.2.4 Shields

System interconnections shall terminate overall cable shields peripherally.

#### 3.2.4.3.1.2.4.1 Terminations

Radio Frequency Interference (RFI) backshells with individual shield grounding provisions shall be used for multiple RF shield terminations. The length of the termination–to–ground lead for RF circuits shall be the minimum practical and shall not exceed 3 inches. The preferred method is to connect the shield peripherally to the

backshell of an RF connector. This requires a continuous low–impedance electrical bond path through both halves of the connector shell, the connector–to–chassis interface, and the chassis–to–ground. All electrical connectors not engaged during mission shall be covered with a conductive cap. High impedance wires shall be terminated with a low impedance.

#### 3.2.4.3.1.2.4.2 Breakouts

Where RFI backshells with individual shield grounding provisions are required for multiple shield terminations, RF circuit shields shall be broken out such that no more than 2 inches of wiring is exposed; and, the wiring must be contained within the connector metal backshell covering.

#### 3.2.4.3.1.2.4.3 Grounding of Radio Frequency Circuit Shields

RF circuit shields shall be structure grounded as often as possible. This requirement can be satisfied by shield grounding to electrically conductive connector backshells at source and load and at any intermediate breakpoints.

#### 3.2.4.3.1.2.4.4 Internal Equipment Shields

Shields originating and terminating within the same equipment shall be grounded therein.

#### 3.2.4.3.1.2.4.5 Grounding

The shield ground shall be as specified in Table IX.

**Table IX** **EMC Classification, Wire Type, and Shield Grounding**

| Frequency f: Rise, Fall Time (ms)$t_r$, $t_f$ | Voltage or Sensitivity | Load Impedance (ohms) | Circuit Class | Minimum Wire Type | Shield Ground[1] |
|---|---|---|---|---|---|
| Analog | ≤100mV | <600 k | ML | TWS | MPG |
| (ac, dc) | ≤100mV | ≥600 k | ML | TWDS | MPG |
| f≤50kHz | <6V | All | ML | TWS | MPG |
| $t_r$, $t_f$ > 10μs | 6–40V | All | HO | TW | None |
| | >40V | All | EO | TW | None |
| 50kHz>f | <100mV | All | RF | TWDS | MPG |
| ≤4MHz $t_r$, $t_f$≤ 10 μs | >100mV | All | RF | TWS | MPG |
| f> 4MHz[1] | All | All | RF | TWS, Coax or Twin–ax | MPG |
| BWAD Fiber Optics | All | All | MO FO | TWS Fiber Optics | MPG |

| Acronyms and Abbreviations: | | |
|---|---|---|
| | ML, HO, EO, MO | Arbitary Nomencalture to define circuit |
| | FO | Classification |
| | MPG | Multiple Point Ground |
| | RF | Radio Frequency |
| | TW | Twisted |
| | TWDS | Twisted Double Shielded |
| | TWS | Twisted Shielded |

Notes:

1. Shield grounding shall be compatible with the circuit application.
2. The length of termination–to–ground lead for all circuits shall be the minimum length practical.
3. The preferred method is to connect the shield peripherally to the back shell of the connector with a continuous impedance electrical bond path through both halves of the connector shell and the connector to mounting surface interface.
4. Digital signals shall be classified as RF (and routed as wire type called out in this table).

### 3.2.4.4 Electromagnetic Emission and Susceptibility Requirements

Investigation hardware emissions and susceptibilities shall comply with these requirements. Testing of the equipment to ensure compliance to the requirements of this document shall be performed using the test methods given in Appendix B.

Alternately, the investigation may choose to accept a minimal increase of EMI risk with a somewhat less stringent Electric Field Radiated Susceptibility (RS03) requirement on

equipment considered to be non-safety critical to the vehicle and crew. The tailored RS03 requirement, shown below, will hereafter be denoted RS03PL.

| FREQUENCY | RS03PL LIMIT (V/m) |
|---|---|
| 14 kHz – 400 MHz | 5 |
| 400 MHz – 450 MHz | 30 |
| 450 MHz – 1 GHz | 5 |
| 1 GHz – 5 GHz | 25 |
| 5 GHz – 6 GHz | 60 |
| 6 GHz – 10 GHz | 20 |
| 13.7 GHz – 15.2 GHz | 25 |

COMMENTS:
1. The less stringent RS03PL limit was developed to envelope the electric fields generated by ISS transmitters and ground-based radars tasked to perform space surveillance and tracking. Ground-based radars that are not tasked to track the ISS and search radars that could momentarily sweep over the ISS are not enveloped by the relaxed RS03PL. For most scientific payloads, the minimal increase of EMI risk for the reduced limits is acceptable. The RS03PL limit does not account for module electric field shielding effectiveness that could theoretically reduce the limits even more. Although shielding effectiveness exists, it is highly dependent on the EPCE location within the module with respect to ISS windows.
2. The conducted susceptibility requirements CS01, CS02 and CS06 are also used as the local stability requirements in Paragraph 3.2.2.7.

#### 3.2.4.4.1 Self-Compatibility

The Equipment Under Test (EUT) shall not malfunction and performance shall not be degraded during Electromagnetic Interference (EMI) testing.

#### 3.2.4.4.2 Equipment Emission and Susceptibility Limits

This paragraph defines emission and susceptibility test limits. General EMI test techniques are contained in Appendix B. Approval of design procedures and techniques does not relieve the Investigation of the responsibility of meeting the emission, and susceptibility test limits. A waiver is required for equipment which cannot meet the emission and susceptibility test requirements. The threshold of susceptibility shall be determined for equipment unable to meet the susceptibility test limits.

##### 3.2.4.4.2.1 Conducted Emissions

Wiring between two or more Orbital Replacement Unit (ORU) shall be exempt from the conducted emission test requirements provided the specific ORUs are tested as a single unit. Wiring external to the group of ORUs tested as a unit shall meet the test limit requirements of this document.

### 3.2.4.4.2.1.1 CE01, Conducted Emissions

Direct current primary power (120V), low frequency, 30 hertz (Hz) to15 kilohertz (kHz).
Direct current secondary power (28V, ±12V, 5V) frequency, 30 Hz to 50 MHz.

#### 3.2.4.4.2.1.1.1 Applicability

CE01 is applicable only for narrowband emissions between 30 Hz and 15 kHz on the 120V primary and 30 Hz to 50 MHz on the secondary direct current (dc) leads which obtain power from or provide power to other equipment, distribution panels or subsystems.

#### 3.2.4.4.2.1.1.2 CE01 Limits

Electromagnetic emissions shall not appear on dc leads in excess of the following values as shown below. The emission limit shown below is for equipment drawing one amp or less. For equipment drawing more than one amp, the limit, in decibels (dB) as shown in Table X shall be raised by 20 x log I, where I equals the total dc current used by the equipment under test.

**TABLE X** **<u>CE01 Emission Limits</u>**

| **120V Primary Power Source** | | | |
|---|---|---|---|
| Frequency | Emissions | | |
| 30 Hz-200 Hz | 110 dB above 1 microampere (1) | | |
| 200 Hz-15 kHz | Decreasing log-linearly with increasing frequency from 110 to 74 dB above 1 microampere (1) | | |
| **28V, ±12V, 5V Secondary Power Source** | | | |
| Frequency | Conducted Ripple/RF Emissions dB$\mu$A per Ampere of Current Draw | | |
| | 28V | ±12V | 5V |
| 30 Hz to 200 Hz | 100 | | |
| 200 Hz to 50 MHz | 91 | | |
| 30 Hz 1 k Hz | | 119 | 113 |
| 1 k Hz to 100 k Hz | | 99 | 93 |
| 100 k Hz to 50 M Hz | | 73 | 67 |

(1) The emissions shall be measured with an effective bandwidth not exceeding 100 Hz.

### 3.2.4.4.2.1.2 CE03, Conducted Emissions

Direct current primary power (120V) leads, 15 kHz to 50 megahertz (MHz).
Direct current secondary power (28V, ±12V, 5V) frequency, 30 Hz to 50 MHz.

### 3.2.4.4.2.1.2.1 Applicability

CE03 is applicable only for narrowband emissions between 15 kHz and 50 MHz on the 120V primary and 30 Hz to 50 MHz on the secondary on dc leads which obtain power from other sources or provide power to other equipment, distribution panels or subsystems.

### 3.2.4.4.2.1.2.2 CE03 Limits

Electromagnetic emissions shall not appear on dc power leads in excess of the following values as shown below for narrowband emissions: The limit shown below is for equipment drawing one amp or less. For equipment drawing more than one amp, the limit as shown in Table XI shall be raised by 20 x log I, where I equals the total dc current used by the equipment under test.

**Table XI** **CE03 Emission Limits**

| **120V Primary Power Source** | | | |
|---|---|---|---|
| Frequency | Emissions | | |
| 15 kHz-500 kHz | Decreasing log-linearly with increasing frequency from 74 to 45 dB above 1 microampere | | |
| 500 kHz-50 MHz | 45 dB above 1 microampere | | |
| **28V, ±12V, 5V Secondary Power Source** | | | |
| Frequency | Conducted Ripple/RF Emissions dB$\mu$A per Ampere of Current Draw | | |
| | 28V | ±12V | 5V |
| 30 Hz to 200 Hz | 100 | | |
| 200 Hz to 50 MHz | 91 | | |
| 30 Hz 1 k Hz | | 119 | 113 |
| 1 k Hz to 100 k Hz | | 99 | 93 |
| 100 k Hz to 50 M Hz | | 73 | 67 |

### 3.2.4.4.2.1.3 CE07, Conducted Emissions

Direct current power leads, spikes, time domain.

### 3.2.4.4.2.1.3.1 Applicability

CE07 is applicable for dc input power leads. Investigations using the MSG secondary power only are not required to perform this test.

### 3.2.4.4.2.1.3.2 CE07 Limits

CE07 on/off and mode switching transients shall not exceed the envelope defined by the following values listed in Table XII. Repetitive on/off and mode switching transients shall not occur more frequently than every 100 milliseconds.

**Table XII** **CE07 Mode Switching Transients Envelope**

| Time (Micro-Seconds) | Percentage of Nominal Line Voltage |
|---|---|
| 0.1-10 | ± 50 percent |
| 10-50 | Decreasing logñlinearly with increasing time from ± 50 percent to ± 20 percent |
| 50-1000 | Decreasing logñlinearly with increasing time from ± 20 percent to ± 5 percent or ± 6 volts(V), whichever is greater |
| 1000-10,000 | ± 6 percent or ± 0.5V, whichever is greater |
| 10,000-100,000 | ± 5 percent or ± 0.5V, whichever is greater |

### 3.2.4.4.2.2 Conducted Susceptibility

### 3.2.4.4.2.2.1 CS01, Conducted Susceptibility

Direct current power leads, 30 Hz to 50 kHz.

### 3.2.4.4.2.2.1.1 Applicability

CS01 is applicable to equipment and subsystems using dc power.

### 3.2.4.4.2.2.1.2 CS01 Limits

The EUT shall not exhibit any malfunction, degradation of performance, or deviation from specified indications beyond the tolerances indicated in the individual equipment or subsystem specification when subjected to electromagnetic energy injected onto its power leads less than or equal to the values as shown in Table XIII.

**Table XIII CS01 Electromagnetic Energy Injection**

| **120V Primary Power Source** | | | |
|---|---|---|---|
| Frequency | Voltage | | |
| 30 Hz-2 kHz | 5 V root mean square (rms) or 10 percent of the supply voltage (E1), whichever is less | | |
| 2 kHz-50 kHz | Decreasing log-linearly with increasing frequency from 5 Vrms or 10 percent of E1 whichever is less, to either 1 Vrms or 1 percent of the supply voltage, whichever is less | | |
| **28V, ±12V, 5V Secondary Power Source** | | | |
| Frequency | Voltage | | |
| | 28V | ±12V | 5V |
| 30 Hz to 50 kHz | 0.5 Vrms | 0.25 Vrms | 0.25 Vrms |

Alternate CS01 Limits for 120 volt loads:
The requirement is also met when the audio power source dissipates 50 W in a 0.5-ohm load, and cannot develop the required terminals, and the EUT is not susceptible to the output of the signal source.

Alternate CS01 Limits for 28 volt loads:
For 28 volt loads the requirement is also considered met at frequencies from 30 Hz to 50 kHz when the ripple source, limited to 50 watts into a 0.5 ohm load, cannot develop 0.5 volts rms at the test sample power input terminals and the test sample is not susceptible due to the output of the signal source.

Alternate CS01 Limits for ±12 and +5 Volt loads:
For ±12 volt and +5 volt loads the requirement is also considered met at frequencies from 30 Hz to 50 kHz when the ripple source, limited to 5 watts into a 0.5 ohm load, cannot develop 0.25 volts rms at the test sample power input terminals and the test sample is not susceptible due to the output of the signal source.

### 3.2.4.4.2.2.2 CS02, Conducted Susceptibility

Direct current power leads, 50 kHz to 50 MHz.

### 3.2.4.4.2.2.2.1 Applicability

CS02 is applicable between 50 kHz and 50 MHz for equipment and subsystem dc power leads, including power returns which are not grounded internally to the equipment or subsystem.

### 3.2.4.4.2.2.2.2 CS02 Limits

The EUT shall not exhibit any malfunction, degradation of performance or deviation from specified indications beyond the tolerances indicated in the individual equipment or subsystem specification when subjected to 1 Vrms (for the 120V interface) from a 50-ohm source. The test signal shall be applied to the equipment power line near the equipment input terminals.

Alternate CS02 Limits for 120V loads:
The requirement is also met under the following condition: A 1 Watt source of 50-ohms impedance cannot develop the required voltage at the EUT power input terminals, and the EUT is not susceptible to the output of the signal source.

Investigations using the secondary power interfaces shall meet this requirement, but use the injection voltage of 0.1 volts rms for the Secondary Power Source (28V, ±12V and 5V).

Alternate CS02 Limits for 28 Volt, ±12 Volt and +5 volt Loads:
For 28 volt, ±12 volt, and +5 volt loads the requirement is also considered met at frequencies from 50 kHz to 50 MHz when the ripple source, limited to 1 watt into a 50 ohm load, cannot develop 0.1 volts rms at the test sample power input terminals and the test sample is not susceptible due to the output of the signal source.

### 3.2.4.4.2.2.3 CS06, Conducted Susceptibility

Spikes, power leads.

### 3.2.4.4.2.2.3.1 Applicability

CS06 is applicable to equipment and subsystem dc power leads, including grounds and returns which are not grounded internally to the equipment or subsystem. Investigations using the MSG secondary power only are not required to perform this test.

### 3.2.4.4.2.2.3.2 CS06 Limits

The EUT shall not exhibit any malfunction, degradation of performance or deviation from specified indications beyond the tolerances indicated in the individual equipment or subsystem specification when the test spikes, each having the waveform shown on Figure 16, are applied sequentially to the dc power input leads. The values of E and t are given below. Each spike shall be superimposed on the powerline voltage waveform.

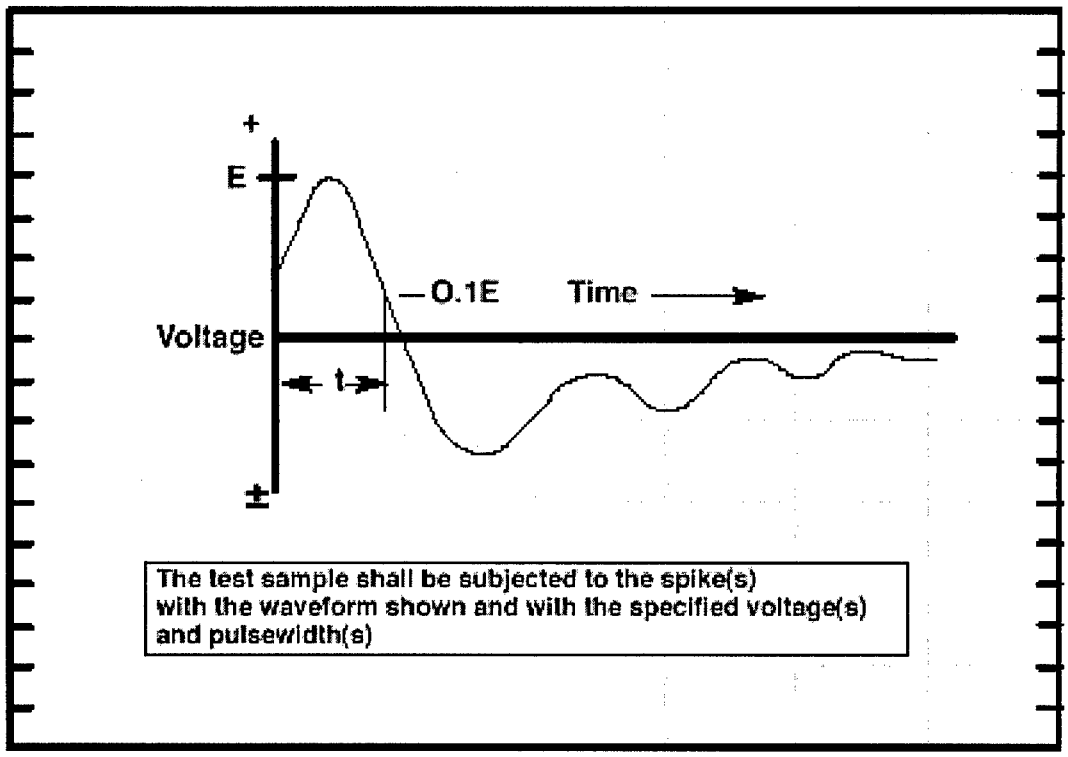


SPIKE #1 E = ± Twice the nominal line voltage, t=10 microseconds ± 20 percent

SPIKE #2 E = ± Twice the nominal line voltage, t=0 15 microseconds ± 20 percent

**Figure 16. CS06 and RS02 Equipment Limit**

### 3.2.4.4.2.3 Radiated Emissions

#### 3.2.4.4.2.3.1 RE02, Radiated Emissions

Electric field, 14 kHz to 10 GHz, 13.5-15.5 GHz (narrowband).

##### 3.2.4.4.2.3.1.1 Applicability

RE02 is applicable for radiated emissions from equipment and subsystems, cables (including control, pulse, IF, power and antenna transmission lines) and interconnecting wiring of the test sample; for narrowband emissions, it applies at the fundamental frequencies and all spurious emissions including harmonics, but does not apply for radiation from antennas. This requirement is applicable for narrowband emissions from 14 kHz to 10 GHz and 13.5-15.5 GHz.

### 3.2.4.4.2.3.1.2 RE02 Limits

E-field emissions shall not be radiated in excess of those specified in the following paragraphs. Above 30 MHz, the limits shall be met for both horizontally and vertically polarized waves. Measurement shall be made in the peak detector mode.

#### 3.2.4.4.2.3.1.2.1 Narrowband Electric Field Emissions

Narrowband Eñfield emissions shall not be radiated in excess of the values as shown in Table XIV and in Figure 17 at the required test distance of 1 m.

**Table XIV Field Emission Limits**

| Frequency | Emissions |
|---|---|
| 14 kHz-10 MHz | 56 dB$\mu$V/m |
| 10 MHz-259 MHz | Increasing logñlinearly with increasing frequency from 56 to 86 dB$\mu$V/m (16dB per decade) |
| 259 MHz-10 GHz | Increasing logñlinearly with increasing frequency from 46 to 72 dB$\mu$V/m (16dB per decade) |
| 13.5-15.5 GHz | 76 dB$\mu$V/m |

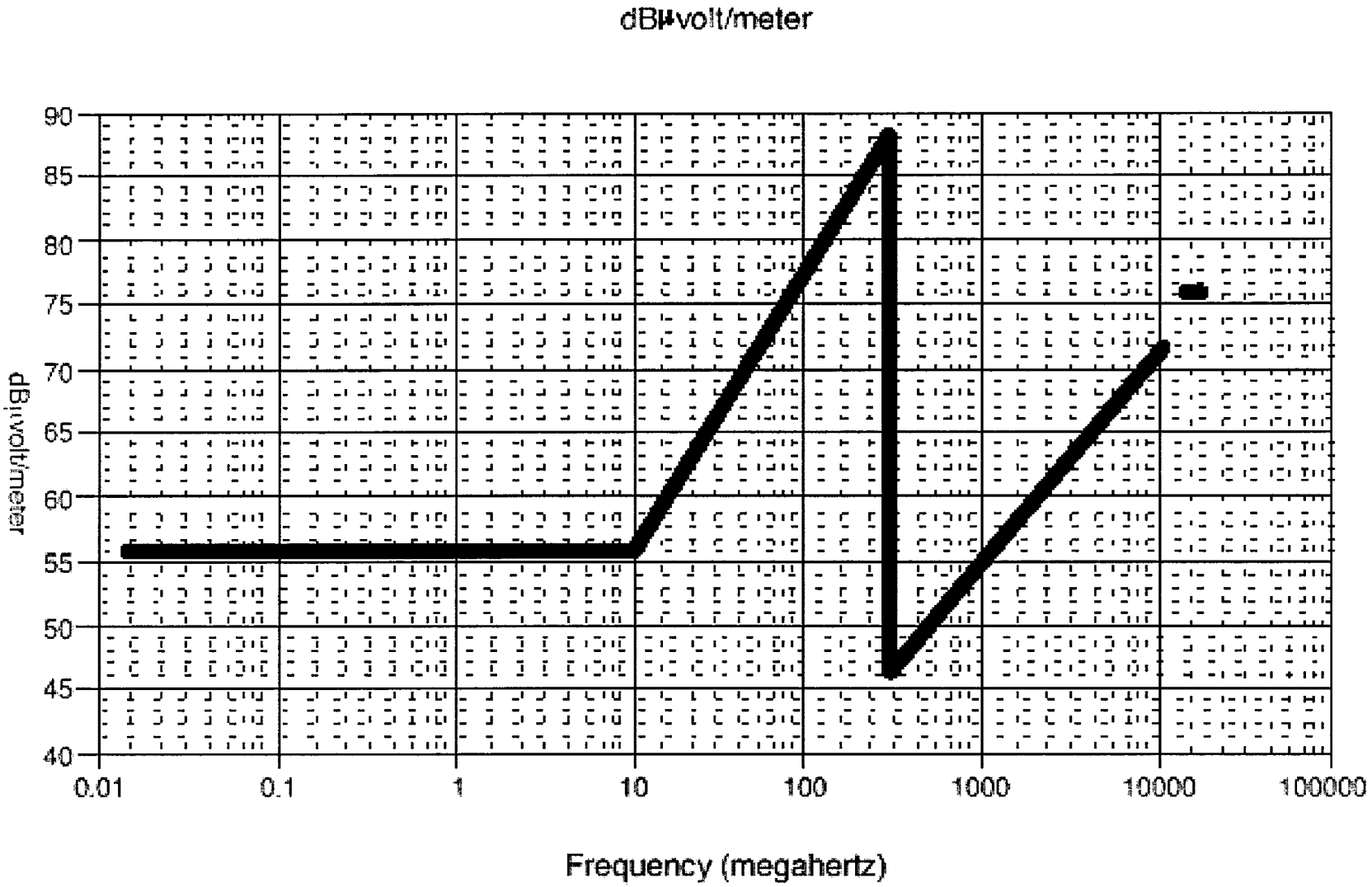


**Figure 17.** ISS Emission Limits

### 3.2.4.4.2.4 Radiated Susceptibility

### 3.2.4.4.2.4.1 RS02, Radiated Susceptibility

Magnetic induction field.

#### 3.2.4.4.2.4.1.1 Applicability

RS02 is applicable for all equipment and subsystems. These susceptibility signals are electromagnetically coupled into the equipment or subsystem wiring.

#### 3.2.4.4.2.4.1.2 RS02 Limits

The EUT shall not exhibit any malfunction, degradation of performance, or deviation from specified indications beyond the tolerances indicated in the individual equipment or subsystem specification when subjected sequentially to the test spikes, shown in Figure 16, each having the waveform with the values of E and t are given below:

- Spike #1 E = ± Twice the nominal line voltage, t = 10 microseconds ± 20 percent
- Spike #2 E = ± Twice the nominal line voltage, t = 0.15 microseconds ± 20 percent.

### 3.2.4.4.2.4.2 RS03, Radiated Susceptibility

Electric field, 14 kHz to 20 GHz.

#### 3.2.4.4.2.4.2.1 Applicability

RS03 is applicable for all equipment and subsystems between 14 kHz and 20 GHz. Above 10 GHz, this requirement applies only at specific frequencies and amplitudes known to be present at the Space Station. Below 10 GHz, this requirement shall be increased only at specific frequencies and amplitudes known to be present at the ISS. Module shielding effectiveness can be used to limit the levels applied.

#### 3.2.4.4.2.4.2.2 RS03 Limits

The EUT shall not exhibit any malfunction, degradation of performance, or deviation, from specified indications beyond the tolerances indicated in the individual equipment or subsystem specification when subjected to the radiated electric fields less than or equal to those specified herein. Above 30 MHz, the requirement shall be met for both horizontally and vertically polarized waves. As a minimum, the levels shown in Table XV apply at either the specific frequencies stated or across the ranges stated.

**Table XV RS03 Limit Levels**

| Frequency/Range | Radiated Electric Field Level |
|---|---|
| 14 kHz-400 MHz | 5 V/m |
| 400 MHz-450 MHz | 30 V/m |
| 450 MHz -1 GHz | 5 V/m |
| 1 GHz - 5 GHz | 25 V/m |
| 5 GHz - 6 GHz | 60 V/m |
| 6 GHz - 10 GHz | 20 V/m |
| 13.7 GHz-15.2 GHz | 25 V/m |

### 3.2.4.4.2.5 Leakage Emissions

### 3.2.4.4.2.5.1 LE01, AC Power User Leakage Current

#### 3.2.4.4.2.5.1.1 Applicability

LE01 is applicable for all equipment and subsystems that use ac power.

#### 3.2.4.4.2.5.1.2 LE01 Limits

The leakage current for all equipment and subsystems using ac power, as measured between chassis and input power, at the power frequency, shall not exceed 5 milliamperes.

### 3.2.4.4.2.6 Testing Requirements

The test requirements and techniques of Appendix B shall be used to determine compliance with the applicable emission and susceptibility test limit requirements of this document. When an EUT susceptibility is noted, the thresholds of susceptibility shall be determined. Equipment that is intended to be operated as a subsystem shall be tested as such to the applicable emissionand susceptibility limits whenever practical.

### 3.2.4.5 Electrostatic Discharge

All unpowered Investigation equipment shall not be damaged by Electrostatic Discharge (ESD) equal to or less than 4,000 V to the case or any pin on external connectors. EPCE that may be damaged by ESD between 4,000 and 15,000 V shall have a label affixed to the case in a location clearly visible in the installed position. Handling of EPCE susceptible to ESD up to 15,000 V shall be in accordance with MIL-STD-1686. These voltages are the result of charges that may be accumulated and discharged from ground personnel or crewmembers during equipment installation or removal.

#### 3.2.4.6 Alternating Current (AC) Magnetic Fields

Investigation generated ac magnetic fields, measured at a distance of 7 centimeters (cm) from the MSG work volume, shall not exceed 140 dB above 1 picotesla for frequencies ranging from 30 Hz, then falling 26.5 dB per decade to 3.5 kHz, and 85 dB for frequencies ranging from 3.5 kHz to 50 Khz.

#### 3.2.4.7 Direct Current (DC) Magnetic Fields

Investigation components containing permanent magnet or electromagnetic devices shall not exceed 170 dB picotesla at a distance of 7 cm from the MSG work volume. This applies to electromagnetic and permanent magnetic devices.

#### 3.2.4.8 Deleted

### 3.2.5 Payload Electrical Safety Requirements

#### 3.2.5.1 Mating/Demating Of Powered Connectors

The Investigation shall meet the electrical safety requirements as defined in NSTS 1700.7B ISS Addendum. Payloads shall comply with the requirements for mating/demating of powered connectors specified in NSTS 18798, MA2-99-170.

#### 3.2.5.2 Safety-Critical Circuits Redundancy

Investigation EPCE shall meet the safety requirements as defined in NSTS 1700.7, ISS Addendum. The Investigation EPCE connected to a power source shall meet the safety critical circuits redundancy requirements defined in NSTS 18798.

#### 3.2.5.3 Power Switches/Controls

a. Switches/controls performing on/off power functions for an Investigation connected to any WV power interface shall open (dead-face), all supply circuit conductors except the power return and the equipment grounding conductor while in the power-off position.

b. Power-off markings and/or indications shall be used only if all parts, with the exception of overcurrent devices and associated EMI filters, are disconnected from the supply circuit.

c. Standby, charging, or other descriptive nomenclature shall be used to indicate that the supply circuit is not completely disconnected for this power condition.

### 3.2.5.4 Deleted

**Table XVI** **Let-go Current Profile Threshold Versus Frequency**

| Frequency (hertz) | Maximum Total Peak Current (AC + DC components combined) (milliampreres) |
|---|---|
| DC | 40 |
| 15 | 8.5 |
| 2000 | 8.5 |
| 3000 | 13.5 |
| 4000 | 15.0 |
| 5000 | 16.5 |
| 6000 | 17.9 |
| 7000 | 19.4 |
| 8000 | 20.9 |
| 9000 | 22.5 |
| 10000 | 24.3 |
| 50000 | 24.3 |

Note: Based on 99.5 percentile rank of adults

### 3.2.5.5 Deleted

## 3.3 Command and Data Handling Requirements

The MSG Data Handling System (DHS) provides the command and data management capabilities of the Investigation.

For operation and control of Investigations inside the MSG WV, the MSG DHS serves as a relay station for transmission of data files to the Investigation from external sources such as the ISS, Electrical Ground Support Equipment (EGSE), MSG Laptop Computer (MLC) or test equipment.

The MSG DHS provides the following interfaces to Investigations within the WV:

- RS-422 Serial Interface
- Digital Input/Output (I/O) and Analog Input Interface

The MIL-STD-1553 is for MLC use only. Details of each of the above interfaces and to the MLC are provided in the paragraphs that follow.

It should be noted that Investigations within the MSG WV are also provided one Ethernet interface (LAN2), which is not supported by the MSG DHS, but instead is a direct connection to the ISS Ethernet.

A block diagram of the DHS is shown in Figure 18.

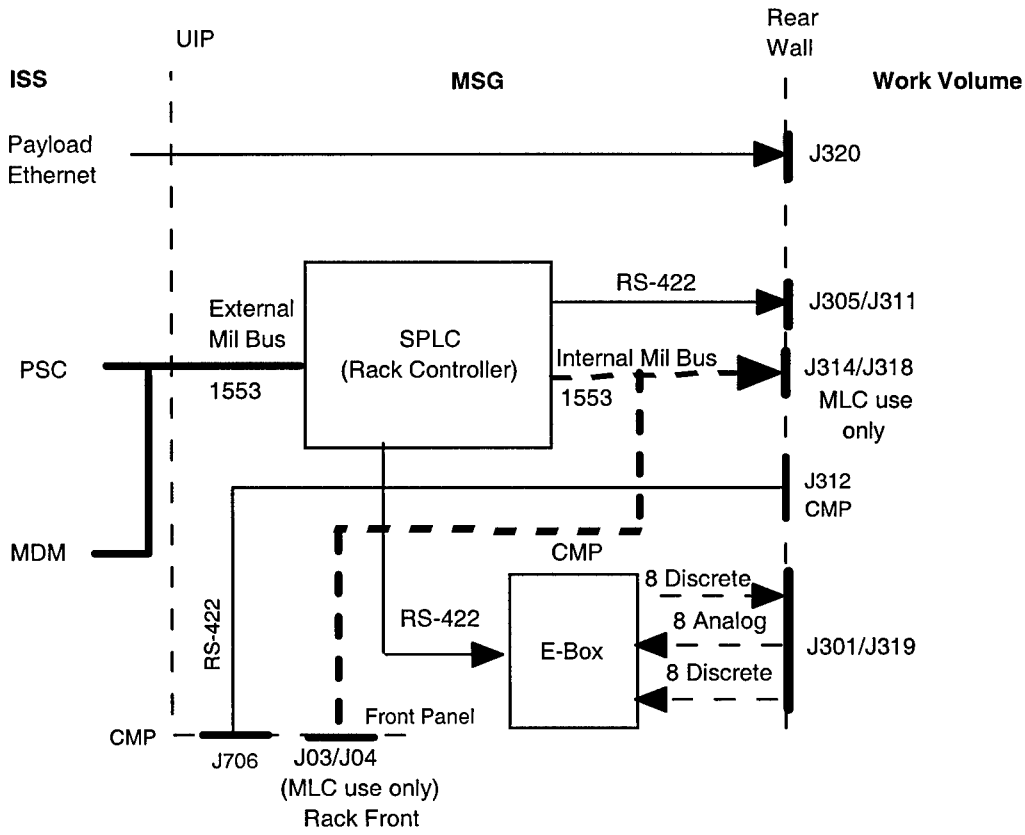


**Figure 18. Data Handling System Block Diagram**

### 3.3.1 General Requirements

#### 3.3.1.1 Software

Investigations shall meet the following protocol and software requirements contained in the following sections. Additional requirements and information for the Investigation interfaces to the MSG software are described in the MSG Software Interface Definition Document, MSG-S/W-IDD-0001. Investigations interfacing with the ISS Ethernet shall comply with the data link protocol(s), command structures, and message formats as defined in SSP-52050 Software Interface Control Document Part 1, International Standard Payload Rack to ISS.

#### 3.3.1.1.1 Software Protocol

Electrical Industry Standard RS422 uses a UART to establish a serial link between two users. The protocol used is partly fixed by the hardware. The configurable parameters of the interface, such as line-speed and line settings (data-bits, start/stop bits and parity) can be set in device drivers.

RS422 can only be used as a point-to-point communication link.

Different protocols are used to ensure safe data traffic over the RS422 serial lines within the MSG Data Handling System. These protocols all contain a means to perform error checking on the data to be sent and received over the link.

#### 3.3.1.1.2 Byte and Bit Order

Data is stored, transmitted and received in Big Endian format by the MSG DHS.
The following convention is used to identify each bit in an N-bit field.

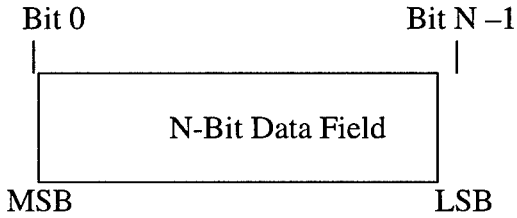


#### 3.3.1.1.3 ESTEC Data Link Format Description Protocol

The protocol used by the RS422 on these interfaces is the ESTEC Data Link Format Description. Packets of data are sent across the interface. These packets contain header information and the byte stuffing and checksum for that packet of data. The packets will be stuffed on certain predefined characters.

a. All data sent across the interface shall be sent in packet format, described in Table XVII.

**Table XVII. EDLF Packet Format**

| Field | Size (Octets) | Type | Meaning | Value |
|---|---|---|---|---|
| Start Code | 1 | ASCII | Start of Packet | STX |
| ID | 2 | ASCII | Byte Ordering; Intel/Motorola | II/MM |
| Data Length | 2 | BINARY | Number of Data Objects | 0..65535 |
| Data | Variable | BINARY | - | 0..255 |
| Checksum | 1 | BINARY | Checksum | 0..255 |
| Stop Code | 1 | ASCII | End of Packet | ETX |

b. The packet is considered successfully received when the checksum is correct and the "unstuffed" packet contains the correct header information. The checksum is calculated from the ID, data length, and all data octets. The algorithm used is an 8-bit addition of all the octets without carry. If the packet was transmitted correctly, all the octets including the checksum octet must add up to zero. Stuffing is performed on certain predefined characters. These are listed in Table XVIII.

**Table XVIII. Character Substitution**

| Data | | Substitution | | Data Description |
|---|---|---|---|---|
| STX | 0x02 | DLE 'S' | 0x10, 0x53 | Start Transmission |
| ETX | 0x03 | DLE 'E' | 0x10, 0x45 | End of Transmission |
| DLE | 0x10 | DLE 'D' | 0x10, 0x44 | Data Link Escape |
| CR | 0x0D | DLE 'R' | 0x10, 0x52 | Carriage Return |
| LF | 0x0A | DLE 'L' | 0x10, 0x4C | Linefeed |

The packet length field and checksum field shall be calculated without byte stuffing. Bytestuffing is performed immediately before sending, and "unstuffing" immediately after reception.

b. The sender of the data over an RS422 interface shall be responsible for checking the buffer sizes and preventing an attempt to transfer more than physically possible due to hardware limitations, else data will be lost.

c. The software shall transmit all data to the RC in Big Endian format.

e. The software shall interpret all data received from the RC as being in Big Endian format.

#### 3.3.1.1.4 Command Acknowledges and Log Messages

Investigations shall develop Command Acknowledges and Log Messages in accordance with Command Acknowledges and Log Messages, of MSG-S/W-IDD-0001.

#### 3.3.1.1.5 Commanding

Investigations shall format their commands in accordance with Experiment Commanding, of MSG-S/W-IDD-0001.

#### 3.3.1.1.6 Health and Status Data

Health and Status data is defined as information that provides the crew and ground confirmation of performance, operational state, resource consumption, and assurance of operating within safety guidelines as defined by the PSRP and the ISS Flight Rules. The MSG provides some insight into the operational state of the investigation via the MSG health and status data, such as the circuit being opened or closed, current being drawn, and WV temperatures.

Investigations shall develop Safety related Health and Status data in accordance with Experiment Health and Status, of MSG-S/W-IDD-0001 when deemed necessary by the PSRP.

When required, the investigations shall send the Safety related data once every second.

#### 3.3.1.1.7 Safety Data

Investigations shall provide as safety data the standard rack caution and warning status words in accordance with Safety Data, of MSG-S/W-IDD-0001.

##### 3.3.1.1.7.1 Caution and Warning

For the purpose of C&W classifications, the sensors are the investigations means of detecting events that were deemed necessary by the PSRP during the Phased Safety Reviews. The sensors used to produce Caution and Warning Events are determined by the investigation, advisories may be set if the investigation identifies a situation that meets the classification of an advisory.

###### 3.3.1.1.7.1.1 Class 1 – Emergency

All of the defined ISS Emergency conditions are reported by the ISS systems or the rack smoke detector, investigations will not report an Emergency condition.

- The emergency condition rapid cabin depressurization will be detected by the ISS module sensors.
- The emergency condition of toxic atmosphere is set as a scar.
- Payload Fire emergency's can only be declared as a confirmed fire event by the ISS rack smoke detector or equivalent, which can detect 96% of the smoke detector failures.

When an emergency event is detected, the format of the data will identify the event type (fire, toxic atmosphere, depressurization).

Emergency conditions require all onboard crew to respond immediately.

**3.3.1.1.7.1.2 Class 2 – Warning**

Investigations shall format the caution and warning word in accordance with the Experiment Health and Status Data for the SPLC and MLC, of MSG-S/W-IDD-0001 as a warning when the investigation sensors detect the following conditions:

a. A potential fire event, (detected by a sensor other than an ISS rack smoke detector or Equivalent)

b. A precursor event that could manifest to an emergency condition (toxic atmosphere, rapid cabin depressurization or fire) and

   (a) automatic safing has failed to safe the event or
   (b) the system is not automatically safed (i.e. requires manual intervention)

c. An event that results in the loss of a hazard control and

   (a) automatic safing has failed to safe the event or
   (b) the system is not automatically safed (i.e. requires manual intervention)

Note: A Warning requires someone to take action immediately. Warnings are used for events that require manual intervention and for notification when automatic safing fails.

**3.3.1.1.7.1.3 Class 3 – Caution**

Investigations shall format the caution and warning word in accordance with the Experiment Health and Status Data for the SPLC and MLC, of MSG-S/W-IDD-0001 as a caution when the investigation sensors detect the following conditions:

a. A precursor event that could manifest to an emergency condition (toxic atmosphere, rapid cabin depressurization or fire) and automatic safing has safed the event (i.e. the system does not require manual intervention)

b. An event that results in the loss of a hazard control and automatic safing has safed the event (i.e., the system does not require manual intervention)

Note: A Caution requires no immediate action by the crew. Automatic safing has controlled the event.

**3.3.1.1.7.1.4 Class 4 – Advisory**

Investigations that require an advisory shall format the caution and warning word in

accordance with the Experiment Health and Status Data for the SPLC and MLC, of MSG-S/W-IDD-0001 as an advisory.

Advisories are set for the following conditions:

a. Advisories are set primarily for ground monitoring purposes (advantageous due to limited comm. coverage and data recording).

b. Data item that most likely will not exist permanently in Telemetry List but should be time tagged and logged for failure isolation, trending, sustaining engineering, etc.

#### 3.3.1.1.8 File Transfer

Investigations requiring file transfer shall develop its file transfer in accordance with File Transfer WV to RC, of MSG-S/W-IDD-0001.

#### 3.3.1.1.9 Illegal Commands

Investigations shall not send commands that would alter the configuration of the MSG facility. Investigations shall follow the guidelines and standards for commanding in accordance with the MSG Software Interface Definition Document, MSG-S/W-IDD-0001.

### 3.3.2 Deleted

**Figure 19. Deleted**

**Table XIX. Deleted**

**Table XX. Deleted**

#### 3.3.2.1 Deleted

#### 3.3.2.2 Deleted

**Table XXI. Deleted**

**Figure 20. Deleted**

### 3.3.3 Investigation RS-422 Interface

#### 3.3.3.1 RS-422 Connector/Pin Assignments

a. The WV RS-422 connectors (J305 and J311) are both type MS27656P9F35S, located on the WV rear wall as shown in Figure 2. The RS422 connection is a 4-wire point-to-point link of two users. The connector characteristics and pin assignments are shown in Tables XXII and XXIII. The WV RS-422 connector (J312) labeled RS-422-CMP is a through put to the MSG CMP top panel connector J706 labeled RS-422-WV. The connector type and contacts are the same as the other RS-422 interfaces.

b. Connectors (J312 & J706) can be configured to RS-232 when the investigation is using them to interface with the MLC. The Investigation shall be compatible with the alternate RS-232 pin assignments as follows, when configured to use the MLC.

RS-422 RX+ becomes RS-232 RX
RS-422 RX- becomes RS-232 RTS
RS-422 TX+ becomes RS-232 TX
RS-422 TX- becomes RS-232 CTS
Shields become Grounds

c. The Investigation provided RS-422 connector (P305/P311) shall be of type MS27467T9F35P, and shall be compatible with the pin assignments shown in Tables XXII and XXIII.

**Table XXII. WV RS-422 Connector J305 Contact Assignments**

| **Connector Label: J305, WV RS-422** | **Connector Type: MS27656P9F35S** | |
|---|---|---|
| **Contact** | **Contact AWG** | **Function/Description** |
| 1 | 22D | RX+ RS-422 WV I/F #5 |
| 2 | 22D | RX- RS-422 WV I/F #5 |
| 3 | 22D | RX Shield RS-422 WV I/F #5 |
| 4 | 22D | TX+ RS-422 WV I/F #5 |
| 5 | 22D | TX- RS-422 WV I/F #5 |
| 6 | 22D | TX Shield RS-422 WV I/F #5 |

**Table XXIII. WV RS-422 Connector J311 Contact Assignments**

| **Connector Label: J311, WV RS-422** | **Connector Type: MS27656P9F35S** | |
|---|---|---|
| **Contact** | **Contact AWG** | **Function/Description** |
| 1 | 22D | RX+ RS-422 WV I/F #1 |
| 2 | 22D | RX- RS-422 WV I/F #1 |
| 3 | 22D | RX Shield RS-422 WV I/F #1 |
| 4 | 22D | TX+ RS-422 WV I/F #1 |
| 5 | 22D | TX- RS-422 WV I/F #1 |
| 6 | 22D | TX Shield RS-422 WV I/F #1 |

### 3.3.3.2 RS-422 Signal Characteristics

Investigation hardware, which requires connectivity to MSG RS-422 interface, shall meet the electrical characteristics in accordance with the Electrical Industry Standard RS422B specification.

| | | |
|---|---|---|
| Type | RS422 Electrical Industry Standard | |
| Settings | 19200,8N1 (fixed) | |
| Data | From RC to WV | From WV to RC |
| | Experiment Commands | Experiment Heath and Status Data |
| | (ECB LRT Data) | Experiment Low Rate Telemetry |
| | (SB Health and Status Data) | Log messages |
| | (RPDA Health and Status Data) | |

### 3.3.3.3 RS-422 Cabling

Investigation RS-422 internal wiring characteristics shall be in accordance with Table XXIV.

**Table XXIV. RS 422 Cable Characteristics**

| Characteristics | **Parameter** |
|---|---|
| Type | Twisted Shielded Pair SSQ 21655 or Equivalent |
| Characteristics Impedance | 100 ± 7 Ohm |
| Cable Size | 22 AWG |
| Nominal wire-to-wire Capacitance | 45 pf/m |

### 3.3.4 Investigation Input/Output (I/O) Interface

The Investigation is provided the following number of analog and digital interfaces split equally between two connectors for data collection and discrete commanding.

Investigations shall meet the following signal levels and resolution requirements when using the I/O interface.

- 8 analog in (Investigation data) - differential,
  -10 to +10 V, 12 bit resolution
- 8 discrete in (Investigation data) - single ended,
  0-0.8 V for logical 0, 3.6-10 V for logical 1
- 8 digital out (Investigation commanding) - single ended,
  0-0.8 V for logical 0, 3.6-10 V for logical 1

The Investigation telemetry data shall contain the (12 bits) digitized values of 0 to 8 analogue channels and 0 or 8 digital 1-bit signals from the WV. To guarantee the minimum required sampling rate (1500 Hz for 1 channel, 750 Hz for 2 channels, 500Hz for 3 channels etc.) over the serial interface a simple protocol is used to minimize overhead. Data is transmitted in fixed length blocks preceded with a SYNC word and terminated with a checksum. Note: that due to hardware limitations the Ground Unit may not reach a maximum sampling rate of 1500 Hz.

#### 3.3.4.1 I/O Connector/Pin Assignments

a. The WV Investigation I/O connectors (J301/J319) are supplied on two MS27656P15F35SA connectors in the WV rear wall as shown in Figure 2. The connector characteristics and contact assignments are listed in Table XXV and XXVI.

b. The Investigation provided connectors (P301/P319) shall be of type MS27467T15F35PA and shall be compatible with the contact assignments defined in Tables XXV and XXVI.

**Table XXV. WV I/O Connector J301 Contact Assignments**

| Connector Label: J301, Exp. Data 1 | Connector Type: MS27656P15F35SA | |
|---|---|---|
| **Contact** | **Contact AWG** | **Function/Description** |
| 1 | 22D | Exp. Data Analog in 0+ |
| 2 | 22D | Exp. Data Analog in 0- |
| 3 | 22D | Exp. Data Analog in 1+ |
| 4 | 22D | Exp. Data Analog in 1- |
| 5 | 22D | Exp. Data Analog in 2+ |
| 6 | 22D | Exp. Data Analog in 2- |
| 7 | 22D | Exp. Data Analog in 3+ |
| 8 | 22D | Exp. Data Analog in 3- |
| 9 | 22D | RTN Analog in (Contacts #1-8) |
| 10 | 22D | Exp. Data Digital in 0 |
| 11 | 22D | Exp. Data Digital in 1 |
| 12 | 22D | Exp. Data Digital in 2 |
| 13 | 22D | Exp. Data Digital in 3 |
| 14 | 22D | Not Connected |
| 15 | 22D | Not Connected |
| 16 | 22D | Not Connected |
| 17 | 22D | Not Connected |
| 18 | 22D | RTN Digital in (Contacts #10-13) |
| 19 | 22D | Exp. Data Digital out 0 |
| 20 | 22D | Exp. Data Digital out 1 |
| 21 | 22D | Exp. Data Digital out 2 |
| 22 | 22D | Exp. Data Digital out 3 |
| 23 | 22D | Not Connected |
| 24 | 22D | Not Connected |
| 25 | 22D | Not Connected |
| 26 | 22D | Not Connected |
| 27 | 22D | RTN Digital out (Contacts #19-22) |
| 28 | 22D | Not Connected |
| 29 | 22D | Not Connected |
| 30 | 22D | Not Connected |
| 31 | 22D | Not Connected |
| 32 | 22D | Not Connected |
| 33 | 22D | Not Connected |
| 34 | 22D | Not Connected |
| 35 | 22D | Not Connected |
| 36 | 22D | Overall Shield (Contacts #9-13) |
| 37 | 22D | Overall Shield (Contacts #18-22, 27) |

**Table XXVI. WV I/O Connector J319 Contact Assignments**

| Connector Label: J319, Exp. Data 2 | Connector Type: MS27656P15F35SA | |
|---|---|---|
| **Contact #** | **Contact AWG** | **Function/Description** |
| 1 | 22D | Exp. Data Analog in 4+ |
| 2 | 22D | Exp. Data Analog in 4- |
| 3 | 22D | Exp. Data Analog in 5+ |
| 4 | 22D | Exp. Data Analog in 5- |
| 5 | 22D | Exp. Data Analog in 6+ |
| 6 | 22D | Exp. Data Analog in 6- |
| 7 | 22D | Exp. Data Analog in 7+ |
| 8 | 22D | Exp. Data Analog in 7- |
| 9 | 22D | RTN Analog in (Contacts #1-8) |
| 10 | 22D | Exp. Data Digital in 4 |
| 11 | 22D | Exp. Data Digital in 5 |
| 12 | 22D | Exp. Data Digital in 6 |
| 13 | 22D | Exp. Data Digital in 7 |
| 14 | 22D | Not Connected |
| 15 | 22D | Not Connected |
| 16 | 22D | Not Connected |
| 17 | 22D | Not Connected |
| 18 | 22D | RTN Digital in (Contacts #10-13) |
| 19 | 22D | Exp. Data Digital out 4 |
| 20 | 22D | Exp. Data Digital out 5 |
| 21 | 22D | Exp. Data Digital out 6 |
| 22 | 22D | Exp. Data Digital out 7 |
| 23 | 22D | Not Connected |
| 24 | 22D | Not Connected |
| 25 | 22D | Not Connected |
| 26 | 22D | Not Connected |
| 27 | 22D | RTN Digital out ( Contact #19-22) |
| 28 | 22D | Not Connected |
| 29 | 22D | Not Connected |
| 30 | 22D | Not Connected |
| 31 | 22D | Not Connected |
| 32 | 22D | Not Connected |
| 33 | 22D | Not Connected |
| 34 | 22D | Not Connected |
| 35 | 22D | Not Connected |
| 36 | 22D | Overall Shield (Contacts #9-13) |
| 37 | 22D | Overall Shield (Contacts #18-22, 27) |

### 3.3.5 Investigation Ethernet Interface

The Investigation is provided one direct interface to the ISS Ethernet via a connector (LAN 2) on the WV rear wall. The Ethernet interface is a direct connection to the ISS Ethernet and is not supported by the MSG DHS.

#### 3.3.5.1 Ethernet Protocol

Investigations that communicate via the Ethernet shall conform with the following protocol and in accordance with paragraph 3.3, Medium Rate Data Link of SSP 52050.

##### 3.3.5.1.1 Investigation Protocols on the Ethernet

a. Investigations that communicate via the Ethernet shall conform with ISO/IEC 8802–3 10–Base-T protocol in accordance with paragraph 3.3, Medium Rate Data Link (MRDL) of SSP 52050.

b. Investigations sending data to the ground through the USOS Space to Ground Link shall use the CCSDS protocol and gateway protocol in paragraph 3.3.4, Gateway Protocol and 3.3.7 Packet Length in SSP 52050.

##### 3.3.5.1.2 Ethernet Address

a. Investigations implementing Ethernet shall have a (unique) IEEE issued Ethernet Media Access Control (MAC) physical address (MAC Address), for each Ethernet attachment.

b. The MAC address shall be set prior to the Ethernet terminal going active.

##### 3.3.5.1.3 Ethernet Connectivity

Ethernet connectivity information may be found in section 3.3, MRDL, of SSP 52050. The Investigation shall be limited to the use of Ethernet LAN2 connection. The MSG MLC requires LAN 1 to transmit data. If the Investigation requires the use of SAMS then there is no direct interface to Ethernet, but the Investigation can use the MLC to downlink its data via Ethernet.

##### 3.3.5.1.4 Ethernet Connector/Pin Assignments

a. The WV Investigation Ethernet connector (J320) is supplied on a D38999/20FG75SN type connector on the WV rear wall as shown in Figure 2. The connector characteristics and contact assignments are defined in Tables XXVII.

b. The Investigation provided connector (P320) shall be of type D38999/26FG75PN and shall be compatible with the contact assignments defined in Tables XXVII.

**Table XXVII. Ethernet Connector J320 Pin Assignments**

| Connector Label: J320, Ethernet | Connector Type: D38999/20FG75SN | |
|---|---|---|
| **Contact** | **Contact AWG** | **Function/Description** |
| A-C1 | Twinax | Ethernet 1 TX+ |
| A-C2 | Twinax | Ethernet 1 TX- |
| A-S | Twinax | Ethernet 1 Shield TX |
| B-C1 | Twinax | Ethernet 1 RX+ |
| B-C2 | Twinax | Ethernet 1 RX- |
| B-S | Twinax | Ethernet 1 Shield RX |
| C-C1 | Twinax | Ethernet 2 TX+ |
| C-C2 | Twinax | Ethernet 2 TX- |
| C-S | Twinax | Ethernet 2 Shield TX |
| D-C1 | Twinax | Ethernet 2 RX+ |
| D-C2 | Twinax | Ethernet 2 RX- |
| D-S | Twinax | Ethernet 2 Shield RX |

Investigation LAN–2 wire shall meet the requirements of 100 Ohm twisted-pair per SSQ 21655 or equivalent. The 100 Ohm twisted shielded pair cable defined in SSQ 21655 must be used due to its characteristics at Ethernet data transmission frequencies.

### 3.3.5.1.5 Ethernet Signal Characteristics

Payloads which require connectivity to the Ethernet shall meet the electrical characteristics of Ethernet in accordance with ISO/IEC 8802–3 with the following exceptions:

IEC Publication 60 High-Voltage Test Techniques
IEC Publication 380 Safety of Electrically Energized Office Machines
IEC Publication 435 Safety of Data Processing Equipment
IEC Publication 950 Safety of Information Technology Equipment, Including Electrical Business Equipment

### 3.3.5.1.6 Ethernet Cable Characteristics

The Investigation shall meet the cable characteristics are given in Table XXVIII.

**Table XXVIII. Ethernet Cable Characteristics**

| Characteristic | Parameter |
|---|---|
| Characteristic Impedance | 100 ±7 Ohm |
| Cable Size | 22 AWG |
| Type of Cable | Twisted Shielded Pair SSQ 21655 or Equivalent |
| Nominal wire-to-wire Capacitance | 45 pF/m |
| Max Cable Length | 1.5 m |

#### 3.3.5.1.6.1 Insertion Loss

The Investigation insertion losses shall meet the requirements specified in paragraph 14.4.2.1 of ISO/IEC 8802–3 with the exception that the wire meets Table XXVIII.

#### 3.3.5.1.6.2 Differential Characteristic Impedance

The Ivestigation Differential Characteristic Impedance shall meet the requirements specified in section 14.4.2.2 of ISO/IEC 8802–3 with the exception that the wire meets Table XXVIII.

#### 3.3.5.1.6.3 Medium Timing Jitter

The investigation medium timing jitter shall meet the requirements specified in paragraph 14.4.2.3 of ISO/IEC 8802–3 with the exception that the wire meets Table XXVIII.

### 3.3.6 MSG Laptop Computer

The MSG Laptop Computer (MLC) is an IBM Thinkpad 760XD model laptop computer. The MLC has a Pentium 166 MHz processor with 104MB of dynamic random access memory. A 5GB Hard Disk Drive is provided for use of the operating system (Microsoft Windows NT 4.0 service pack 5), the MLC Server Software, Investigation Application Software, and data storage will reside on the harddrive. A 1.44 MB Floppy Disk Drive and a CD-ROM are provided as additional data storage devices.

Investigations using the MLC shall meet the software protocol requirements in section 3.3.1.1, unless using a different application software i.e., Commercial Off The Shelf (COTS) software. Investigations using COTS software shall coordinate with the IIT for requirements and constraints concerning COTS software use with the MLC. Information regarding the investigation application software requirements for the MLC is provided in the MSG Software Interface Definition Document, MSG-S/W-IDD-0001.

The MLC provides the following data interfaces for use by the server software, and are not to be used by Investigation Application Software:

- Ethernet communication between the Station LAN 1 and the MLC.
- 1553B communication between the MSG and the MLC.

The MLC provides the following data interfaces for use by the Investigation Application Software:

- Serial Ports based on 16550 chip architecture
  - Baud Rate (9600, 19200, 38400, 57600)
  - 8 data bits, 1 start, 1 stop, no parity
  - Hardware handshake via RTS and CTS

- One Parallel Port based on the Centronics protocol

### 3.3.6.1 MLC Data Interface Connector/Pin Assignments

#### 3.3.6.1.1 RS-232C Data Port

The MLC RS-232C is an asynchronous serial I/O port. This is a standard serial port as defined in EIA STD RS-232C. The Investigation will either interface to the serial J404 feed-through port in the front of the MSG WV or J312 in the WV, as described in section 3.3.3.1, when interfacing to the MLC serial I/O port when the MLC is outside of the WV. The Investigation provided connector (P404) shall be compatible with the connector and pin assignments identified in Table XXIX when using J404. When the investigation is using the MLC inside the WV the investigation provided connector shall be compatible with the standard DB9 connector provided on the MLC serial port.

Cable converters can be provided to convert RS-232 to RS-422 signal levels; however the Investigation shall supply power to the converter.

**Table XXIX. Serial Connector Pin Assignments**

| **Connector Label: J404, Serial RS-232** | **Connector Type: MS27656P9F35S** | |
|---|---|---|
| **Contact** | **Contact AWG** | **Function/Description** |
| 1 | 20 | RX+ (RS232 RX) |
| 2 | 20 | RX- (RS232 RTS) |
| 3 | 20 | RX Shield (RS232 GND) |
| 4 | 20 | TX+ (RS232 TX) |
| 5 | 20 | TX- (RS232 CTS) |
| 6 | 20 | TX Shield (RS232 GND) |

### 3.3.6.1.2 Parallel Port

The MLC parallel port is functionally equivalent to the IBM AT printer adapter. The port supports Centronics-type printers or general-purpose parallel I/O port. The Investigation can interface two different ways to the parallel port, either by using J403 on a feed-through port in the front of the MSG WV when the MLC is located outside of the WV or directly to the MLC parallel port when the MLC is located inside the WV.

The J403 feed-through (connector type NB5H18-32PSN) is a straight pin-to-pin connector with 20 AWG pins, 32 available, and is user defined by the investigation. The feed-through was designed for communication to the parallel port (see Table XXX for parallel port pin functions) when the MLC is outside the WV, but it can be used by the investigation for other purposes. Pin functions shall be identified/assigned in the Unique Investigation ICD for the feed-through or parallel port.

The Investigation provided connector (P403) shall be of type NB6E18-32PN when interfacing to the J403 feed-through inside the WV or type NB6E18-32SN when outside the WV. When the investigation is using the MLC inside the WV the investigation provided connector shall be compatible with the standard DB25 connector provided on the MLC parallel port. The pin assignments for the MLC parallel port are identified in Table XXX.

**Table XXX. MLC Parallel Connector Pin Assignments**

| **Connector Label: MLC Parallel Port** | **Connector Type: DB25** | |
|---|---|---|
| **Contact** | **Contact AWG** | **Function/Description** |
| 1 | 20 | -Strobe Register Bit C0 |
| 2 | 20 | +Data Bit 0 Register Bit D0 |
| 3 | 20 | +Data Bit 1 Register Bit D1 |
| 4 | 20 | +Data Bit 2 Register Bit D2 |
| 5 | 20 | +Data Bit 3 Register Bit D3 |
| 6 | 20 | +Data Bit 4 Register Bit D4 |
| 7 | 20 | +Data Bit 5 Register Bit D5 |
| 8 | 20 | +Data Bit 6 Register Bit D6 |
| 9 | 20 | +Data Bit 7 Register Bit D7 |
| 10 | 20 | -Acknowledge Register Bit S6 |
| 11 | 20 | +Busy Register Bit S7 |
| 12 | 20 | +Paper End Register Bit S5 |
| 13 | 20 | +Select Register Bit S4 |
| 14 | 20 | -Auto Feed Register Bit C1 |
| 15 | 20 | -Error Register Bit S3 |
| 16 | 20 | -Initialize Register Bit C2 |
| 17 | 20 | -Select In Register Bit C3 |
| 18-25 | 20 | Grounds |

### 3.3.7 Investigation Video Interface

A video system is provided in the MSG for investigation use. The entire system is described in the MSG Capabilities Manual, MSFC-HBDK-3051. For Investigation provided cameras MSG provides video/camera feedthrough connectors on three separate ports located in the upper front left (3 connectors) and right (3 connectors) and bottom right (3 connectors) corners of the WV window.

A 1A fuse with a derated current value of 0.65A protects the 12V power provided to the camera. Investigation provided camera power consumption shall not exceed 7.8 Watts. Investigation provided cameras shall be National Television Standard Committee (NTSC) video standard EIA RS-170A cameras.

The connector type for the feedthrough connectors (A,B,C) are SGJ-2B-319-CLL-PV (LEMO), female contacts located on the WV inside. The investigation provided connector (A,B,C) shall be of type FGG-2B-319-CLCD and shall be compatible with the contact assignments defined in Table XXXI when using the MSG video system. Connector markings and pin assignments shall be worked with the IIT and documented in the Unique Investigation ICD for the feedthrough connectors.

**Table XXXI. Video Connector Contact Assignments**

| **Connector Label: A,B,C Exp. Video 1 - 9** | **Connector Type: LEMO: SGJ-2B-319-CLL-PV (LEMO)** | |
|---|---|---|
| **Contact #** | **Contact AWG** | **Function/Description** |
| 1 | 22 | RTN (power) |
| 2 | 22 | + 12V In (power) |
| 3 | 22 | Not Connected |
| 4 | TSP | RTN Comp. video |
| 5 | TSP | Comp. video |
| 6 | TSP | RTN Y |
| 7 | TSP | Y Out |
| 8 | TSP | RTN C |
| 9 | TSP | C Out |
| 10 | TSP | RTN Sync |
| 11 | TSP | Sync. In |
| 12 | 24 | RTN 12V |
| 13 | 24 | Not Connected |
| 14 | 24 | SD In |
| 15 | 24 | SD Out |
| 16 | 24 | Not Connected |
| 17 | 24 | Not Connected |
| 18 | 24 | Not Connected |
| 19 | 24 | Not Connected |
| | | |

## 3.4 Thermal Control Interface Requirements

The MSG Thermal Control Subsystem (TCS) provides both water cooling and avionics air cooling for MSG and Investigation hardware. The paragraphs below define the interface characteristics for the MSG TCS interfaces that are provided to the Investigation within the WV.

### 3.4.1 Investigation Thermal Interfaces

Thermal cooling for Investigation hardware within the WV is provided by the WV Air Circulation System (ACS) and a coldplate which is mounted in the floor of the WV. Together, these provide a total 1,000 W of heat rejection for Investigation equipment inside the WV.

#### 3.4.1.1 WV Air Circulation System (ACS)

The WV air circulation is established by the MSG Air Handling Unit (AHU). The AHU heat exchanger provides 200 W of investigation cooling, at an airflow rate of 1200 l/min and a maximum velocity of 0.044 m/s at the centerline of the WV. The airflow can be varied between 15% and 100% depending on fan speed settings. The rate and velocity is calculated without an Investigation inside the WV. Investigation power draw data shall be used to determine if the AHU heat exchanger is capable of removing the dissipated heat load. Any Investigation that dissipates more than 150 watts into the AHU heat exchanger shall be required to do an integrated test with the facility.

The filtration system provides for particulate removal, filtration of single spillage, and oxidation of CO to $CO_2$ by means of a built-in catalyst.

Due to the hydroscopic nature of the filters, the humidity inside the WV will be maintained at or below cabin level.

Figure 21 provides block diagram of the MSG air loops.

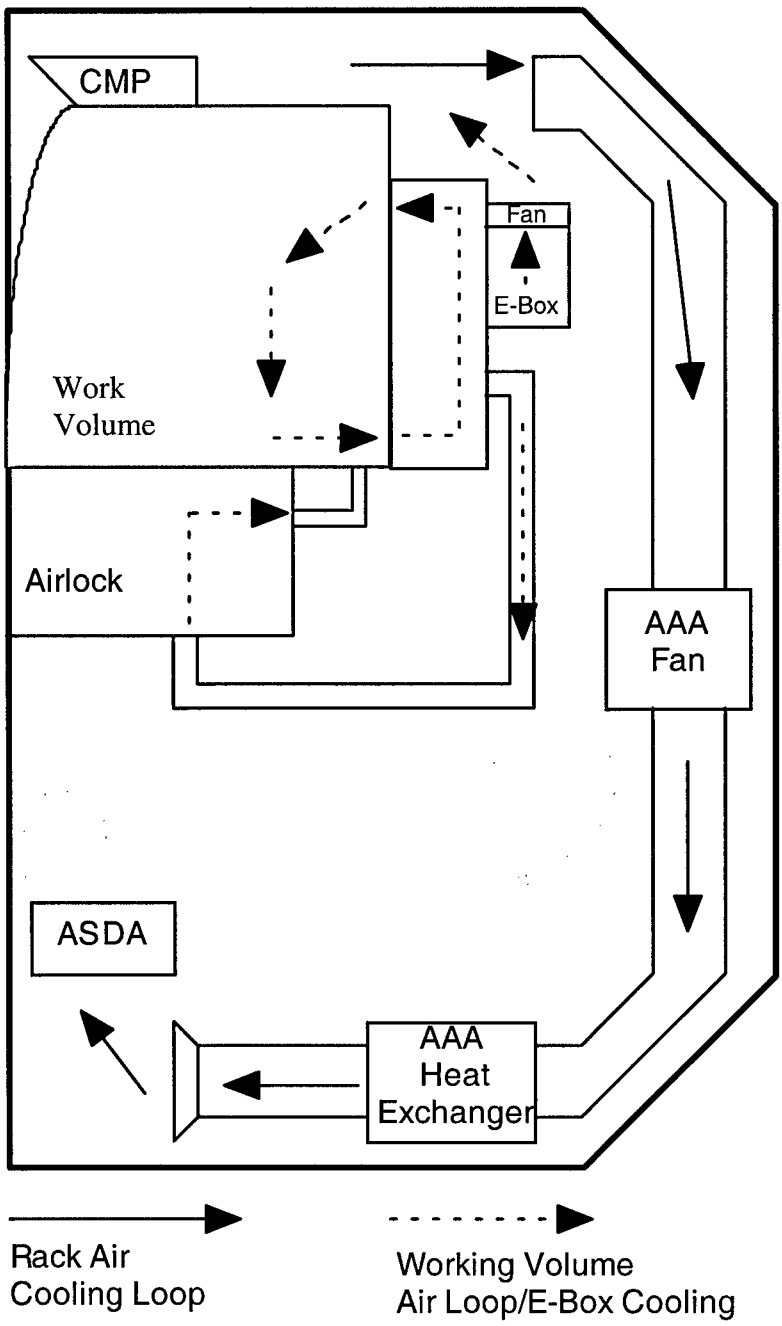


**Figure 21. MSG Air Loops**

### 3.4.1.2 WV Coldplate

Investigation cooling is also provided via a 350 mm x 400 mm coldplate embedded in the WV floor. Figure 23 provides a block diagram of the MSG water coolant loops.

The coldplate is located on the left side of the WV floor as indicated in Figure 2.

Investigations that do not use the coldplate to dissipate heat are not required to meet the thermal requirements of section 3.4.1.2.1.

### 3.4.1.2.1 Investigation Coldplate Mounting Requirements

a. The Investigation baseplate shall maintain a flatness of 0.1mm and a surface finish of 125 microinches on the surface in contact with the work volume coldplate.

b. The Investigation shall utilize M6 threaded captive fasteners to attach hardware to the work volume coldplate. Investigations using the coldplate to dissipate heat shall tighten their bolts in according with their thermal requirements but not to exceed 45 in-lbs of torque. If a special tool is required to torque the fasteners the Investigation shall provide it. Refer to Figure 2 for mounting hole locations.

c. The Investigation shall provide, to the maximum extent possible, an equal heat distribution over the coldplate surface.

d. Total heat dissipation to the coldplate shall be no more than 800 Watts.

e. Investigations that require more than 600 Watts of heat to be removed by the coldplate shall be required to perform an integrated test with the facility.

f. The predicted MSG coldplate temperatures are shown in Figure 22. These temperatures are a function of experiment heat dissipation and coldplate coolant flow rate.

Note: Predicted coldplate temperatures are based on a coolant inlet temperature of 20°C.

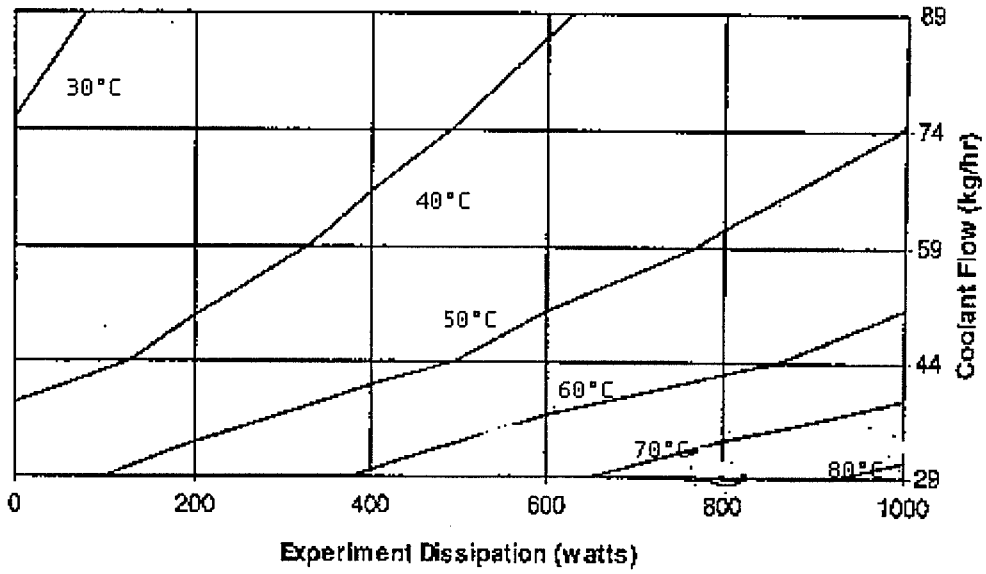


**Figure 22. MSG Coldplate Temperature Contours**

g. A developmental test of the MSG coldplate has been performed and the following characteristics can be assumed about the temperature change from the investigation baseplate to the coldplate:

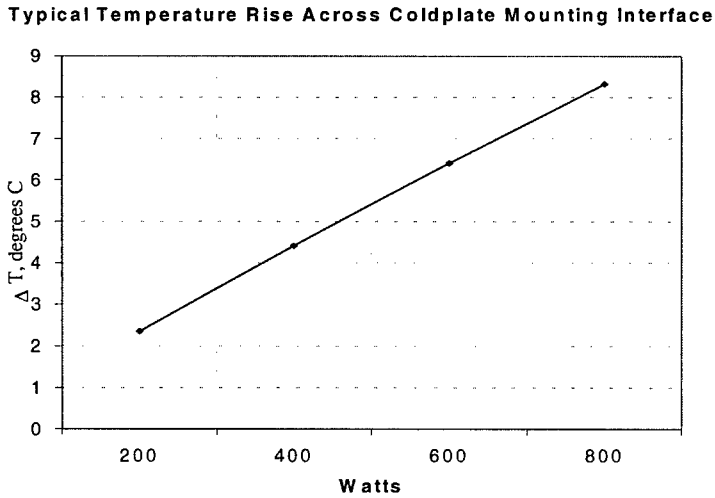

### 3.4.1.3 Airlock Air Circulation System

No active thermal conditioning of the AL is provided. The AL ACS is part of the Glovebox ACS and provides conditioning of the AL atmosphere. Therefore, no powered operations will be conducted in the AL.
The AL airflow rate is 1 l/s with an air inlet area of 0.005 $m^2$. The fan speed can be adjusted at the CMP.

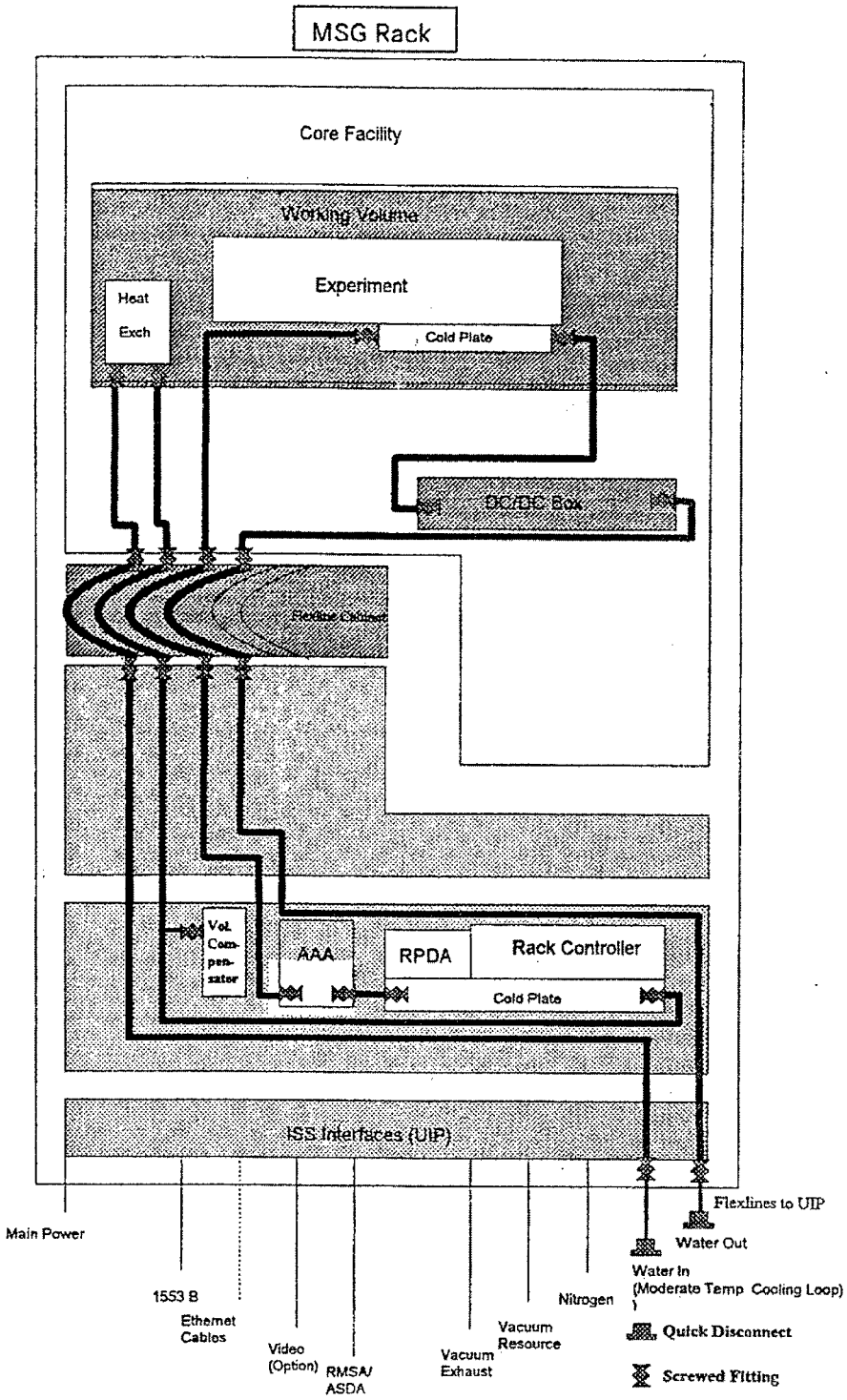


**Figure 23. MSG Water Loops**

## 3.5 Vacuum System Requirements

The MSG provides the Investigation a direct interface connection to the ISS Vacuum Exhaust System (VES) and Vacuum Resource System (VRS) via quick disconnects (QDs) and manual shut-off valves located on the rear wall of WV. The system becomes active after opening the shut-off valve inside the WV. Figure 24 provides a block diagram of the MSG to ISS Vacuum System interface.

### 3.5.1 Vacuum Exhaust System

#### 3.5.1.1 VES Physical Interface

The WV VES QD is supplied on a 0.5" swagelock body, part # SS-QC8-B1-810K6, and white in color located on the WV rear wall as indicated in Figure 2.

a. The Investigation provided QD shall be a swagelock stem, part # SS-QC8-D1-810K6 and shall be compatible with the WV VES QD. In the part number the D indicates a double end shut-off and the K indicates the keying.

b. The maximum leak rate of the VES connection shall be $2 \times 10^{-3}$ scc/sec.

c. The Investigation shall provide one additional controls (e.g. a valve) for use of the VES to comply with the ISS safety requirements.

d. The Investigation shall ensure that the VES valve will not be blocked.

e. Flow rate is limited to 25 normal liters per second.

f. Vented gases must be of the approved type (see section 3.5.1.5).

#### 3.5.1.2 Input Pressure Limit

a. Investigations shall limit their vented exhaust gas to a pressure of 276 kPa (40 psia) or less at the WV interface.

b. Investigation volumes connected to the VES shall be designed to the maximum design pressure (MDP) of at least 276 kPa (40 psia) with a safety factor of 1.5 based on MDP. Lines and fittings used to interface with the WV QD shall have an ultimate factor of safety equal to or greater than 4.0 based on MDP.

c. Investigations shall be two failure tolerant to protect against failure conditions which would exceed the VES max design pressure of 276 kPa (40 psia).

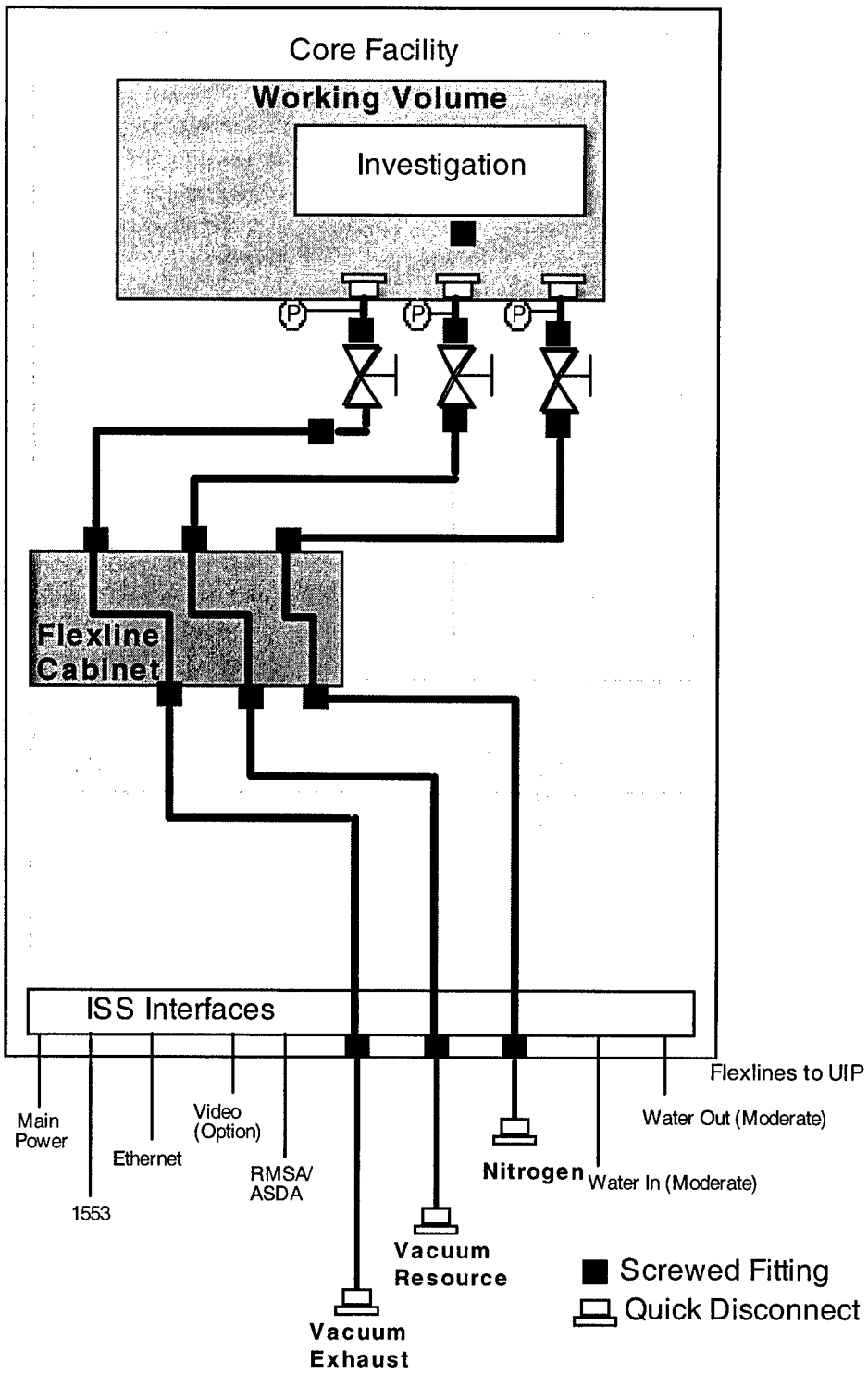


**Note: Pressure Transducers are for facility check out only.**

**Figure 24. <u>MSG to ISS Vacuum System Interface</u>**

### 3.5.1.3 Input Temperature Limit

The initial temperature range of Investigation exhaust gases shall be between 16°C (60° F) and 45°C (113° F).

### 3.5.1.4 Input Dewpoint Limit

The initial dewpoint of Investigation exhaust gases shall be limited to 16° C (60° F) or less.

### 3.5.1.5 Acceptable Exhaust Gases

a. Investigation exhaust gases vented into the VES shall be compatible with the wetted surface materials of the U.S. Lab. Materials in the wetted surfaces of the U.S. Lab which will be in contact with user payload waste gases are limited to:

- Stainless steel 321 and 450,
- Titanium 6A1-4V,
- Fluorocarbon rubber (Viton) (in Pirani gage transducer),
- Glass,
- Platinum-iridium alloy,
- Gold plated brass (in cold cathode transducer),
- Ceramic,
- Aluminum, (in cold cathode transducer)
- Tetrafluoreothylene, (Teflon)

b. Investigation vented exhaust gases shall be non-reactive with other vent gas mixture constituents.

c. Investigations venting to the VES or VRS shall provide a means of removing gases that would adhere to the tubing walls at a wall temperature of 4° C (40° F) and at a pressure of $10^{-3}$ torr.

d. Investigations venting to the VES or VRS shall remove particulates from the vent gases that are larger than 10 micrometers in size.

#### 3.5.1.5.1 Acceptable Gases-Initial List

A list of acceptable exhaust gases with verified compatibility to the U.S. Lab wetted materials is specified in Appendix D. A list of unacceptable gases that are not compatible with the U.S. Lab wetted materials is specified in Appendix D.

#### 3.5.1.5.2 External Contamination Control

Investigation exhaust gases shall be compatible with the molecular column density, particulate, and deposition on external Space Station surfaces.

a. The molecular column density created by the presence of ISS contamination sources along any unobstructed line of sight shall not exceed $1x10^{14}$ molecular-cm $^{-2}$ for individual released species.

b. The release of particulates from the ISS shall be limited to one particle 100 microns or larger per orbit per $1x10^{-5}$ steradian field of view as seen by a 1 meter diameter aperture telecsope.

c. The flux of molecules emanating from the ISS shall be limited such that the 300K mass deposition rate on sampling surfaces shall be limited to $1x10^{-14}$ g-cm $^{-2}$ -sec $^{-1}$ (daily average).

d. Investigations shall specify the material(s) to be dumped through the vacuum line.

e. Investigations shall provide an absorbing filter for toxic materials that are dumped through the VES.

#### 3.5.1.5.3 Incompatible Gases

The Investigation shall provide containment, storage, and transport hardware for gases that are incompatible with the vacuum exhaust or external environment.

Containment hardware for incompatible gases shall meet the containment requirements specified in section 209.1b, of the ISS Addendum to NSTS 1700.7.

### 3.5.2 Vacuum Resource System

#### 3.5.2.1 VRS Physical Interface

The WV Investigation VRS QD is supplied on a 0.5" swagelock body, part # SS-QC8-B1-810K1, and black in color located on the WV rear wall as indicated in Figure 2.

a. The Investigation provided QD shall be a swagelock stem, part # SS-QC8-D1-810K1 and shall be compatible with the WV VRS QD. In the part number the D indicates a double end shut-off and the K indicates the keying.

b. The maximum leak rate of the VRS connection shall be $2 \times 10^{-3}$ scc/sec.

c. The Investigation shall provide one additional controls (e.g. a valve) for use of the VRS to comply with the ISS safety requirements.

d. The Investigation shall ensure that the VRS valve will not be blocked.

e. Gases released by the Investigation shall be within the same restrictions as for exhaust gases defined in section 3.5.1.5.

#### 3.5.2.2 Input Pressure Limit

a. Investigations shall limit their vented VRS gas to a pressure of $10^{-3}$ torr or less at the WV interface.

b. Investigation volumes connected to the VRS shall be designed to the maximum design pressure (MDP) of at least 276 kPa (40 psia) with a safety factor of 1.5 based on MDP. Lines and fittings used to interface with the WV QD shall have an ultimate factor of safety equal to or greater than 4.0 based on MDP.

c. Investigations shall be two failure tolerant to protect against failure conditions which would exceed the VRS max design pressure of 276 kPa (40 psia).

#### 3.5.2.3 VRS Through-Put Limit

The Investigation shall limit the gas throughput to the VRS to less than $1.2 \times 10^{-3}$ scc/second.

## 3.6 Pressurized Gas Requirements

### 3.6.1 Nitrogen Interface Requirements

The MSG provides the Investigation a direct interface connection to the ISS Nitrogen via a quick disconnect (QD), and a needle valve located on the rear wall of WV. The system becomes active after opening the needle valve close to the CD. The MSG to ISS nitrogen interface is shown in Figure 23.

#### 3.6.1.1 Nitrogen Physical Interface

The WV Investigation nitrogen QD is supplied on a 0.25" swagelock body, part # SS-QC4-B1-400, no key, and no color, located on the WV rear wall as shown in Figure 2.

a. The Investigation provided nitrogen QD shall be a swagelock stem, part # SS-QC4-D1-400 and shall be compatible with the WV $GN_2$ QD. In the part number the D indicates a double end shut-off.

b. The maximum leak rate of the nitrogen connection and any permeation through materials from the WV QD to the Investigation shall be no greater than $10^{-3}$ scc/sec at MDP.

#### 3.6.1.2 Nitrogen Flow Control

The Investigation shall provide a control so that the flow of nitrogen does not exceed 5.43 kg/hr (12 lbm/hr) at an operating pressure of 517 to 827 kPa (75 to 120 psia).

#### 3.6.1.3 Nitrogen Interface Design Pressure

The maximum design pressure (MDP) of the Investigation nitrogen system shall be 1,379 kPa (200 psia).

#### 3.6.1.4 Nitrogen Interface Temperature

The Investigation nitrogen system shall be designed for a nitrogen supply temperature range of 15.6 °C to 45 °C (60 °F to 113 °F).

#### 3.6.1.5 Nitrogen Operational Constraints

For use of the nitrogen system the following three controls are required by the Investigation:

a. Oxygen sensor.

b. The crew is required to open a side port or front gloveport while fans are in Normal Mode so fresh cabin air can be sucked into the WV, filtered, and released.

c. Verify reading of oxygen sensor is above 10.5% $O_2$ before opening the WV.

### 3.6.2 Pressurized Gas Bottles

Pressurized gas systems with a total expanded gas volume exceeding 400 liters at standard conditions shall limit the gas flow after a single failure to less than 240 standard liter per minute after 400 liters at standard conditions has been released to the cabin air.

## 3.7 Environment Interface Requirements

### 3.7.1 Atmosphere Requirements

#### 3.7.1.1 Pressure

The Investigation shall be safe when exposed to the pressure transitions between 0 to 104.8 kPa (0 to 15.2 psia).

#### 3.7.1.2 Temperature

The Investigation shall be safe when exposed to the temperatures of 10 to 46° C (50 to 115° F). Investigation must be safe for all potential temperature conditions related from failures to ISS, MSG, or investigation hasrdware.

#### 3.7.1.3 Humidity

The Investigation shall be designed to not cause condensation when exposed to a dewpoint of 4.5 to 15.6° C (40 to 60° F) and a relative humidity of 25 to 75% except when condensation is an intended operation of the Investigation.

### 3.7.2 Illumination

#### 3.7.2.1 WV Illumination

An illumination system of three identical illumination units is accommodated in the WV top wall. The illumination system provides up to 1000 lux illumination at approximately 200 mm above the WV floor. The general illumination is variable in intensity. At the maximum intensity the color temperature is $\geq$ 2750° Kelvin, with a color rendering index (RA) of 85 or better.

If the Investigation requires additional lighting, a MSG provided spotlight can be used or the Investigation can provide its own dedicated illumination source provided it meets the requirements specified in paragraph 3.7.2.3.

#### 3.7.2.2 Airlock Illumination

An illuminations system is accommodated inside the Airlock (AL) at the left wall which supplies 323 lux general working light. Switching the airlock illumination ON or OFF can be done by a switch on the CMP. There are no requirements to the Investigation concerning AL illumination.

#### 3.7.2.3 Spotlight Illumination

MSG provides a spotlight, variable in intensity of up to 1000 lux at a spot diameter of 140 cm. The spotlight connector can be installed directly on the J304 connector on the rear wall of the WV, or if the ICP is connected, on the J334 connector. Both connector types are MS27656P15F35S. If the MSG spotlight does not meet the needs of the Investigation, a dedicated Investigation spotlight can be installed, provided it meets the requirements specified in paragraph 3.7.2.3.1.

#### 3.7.2.3.1 ICP Outlet Interface Requirements

The WV ICP (J304) connector located on the WV rear wall and the ICP OUTLET (J334) connector located on the ICP are MS27656P15F35S type connectors. The connector characteristics and contact assignments are listed in Tables XXXII and XXXIII.

a. The Investigation provided connector shall be of type MS27467T15F35P and shall be compatible with the contact assignments defined in Tables XXXII and XXXIII.

b. Contacts 25 and 26 shall be bridged inside the experiment system to assure proper operation of the inhibit. It is required to place the inhibit link in the connector.

c. The Investigation provided spotlight/equipment shall have a maximum power rating of +12V/2A (24W).

d. The max inrush current shall not be greater than 2 x nominal operating current for up to 10 ms.

e. For thermal reasons the spotlight shall not be covered while on.

f. The Investigation provided spotlight/equipment shall meet the bonding requirements of section 3.2.4.2 or use pin 24 to ensure a proper bonding path.

**Table XXXII . WV ICP Connector Contact Assignments**

| Connector Label: J304, ICP | Connector Type: MS27656P15F35S | |
|---|---|---|
| **Contact** | **Internal Wire AWG** | **Function/Description** |
| 1 | 22D | N/A for Investigations |
| 2 | 22D | N/A for Investigations |
| 3 | 22D | N/A for Investigations |
| 4 | 22D | N/A for Investigations |
| 5 | 22D | N/A for Investigations |
| 6 | 22D | N/A for Investigations |
| 7 | 22D | N/A for Investigations |
| 8 | 22D | N/A for Investigations |
| 9 | 22D | N/A for Investigations |
| 10 | 22D | N/A for Investigations |
| 11 | 22D | N/A for Investigations |
| 12 | 22D | N/A for Investigations |
| 13 | 22D | N/A for Investigations |
| 14 | 22D | N/A for Investigations |
| 15 | 22D | N/A for Investigations |
| 16 | 22D | N/A for Investigations |
| 17 | 22D | N/A for Investigations |
| 18 | 22D | N/A for Investigations |
| 19 | 22D | N/A for Investigations |
| 20 | 22D | N/A for Investigations |
| 21 | 22D | N/A for Investigations |
| 22 | 22D | N/A for Investigations |
| 23 | 22D | N/A for Investigations |
| 24 | 22D | Chassis |
| 25 | 22D | RTN Inhibit 1 |
| 26 | 22D | Inhibit 1 (+12V Power) |
| 27 | 22D | RTN for +12V/2A Power |
| 28 | 22D | +12V/2A Power |
| 29 | 22D | N/A for Investigations |
| 30 | 22D | N/A for Investigations |
| 31 | 22D | N/A for Investigations |
| 32 | 22D | N/A for Investigations |
| 33 | 22D | N/A for Investigations |
| 34 | 22D | N/A for Investigations |
| 35 | 22D | N/A for Investigations |
| 36 | 22D | N/A for Investigations |
| 37 | 22D | N/A for Investigations |

**Table XXXIII. ICP OUTLET Connector Contact Assignments**

| Connector Label: J334, Spotlight Interface | Connector Type: MS27656P15F35S | |
|---|---|---|
| **Contact** | **Internal Wire AWG** | **Function/Description** |
| 1 | 22D | N/A for Investigations |
| 2 | 22D | N/A for Investigations |
| 3 | 22D | N/A for Investigations |
| 4 | 22D | N/A for Investigations |
| 5 | 22D | N/A for Investigations |
| 6 | 22D | N/A for Investigations |
| 7 | 22D | N/A for Investigations |
| 8 | 22D | N/A for Investigations |
| 9 | 22D | N/A for Investigations |
| 10 | 22D | N/A for Investigations |
| 11 | 22D | N/A for Investigations |
| 12 | 22D | N/A for Investigations |
| 13 | 22D | N/A for Investigations |
| 14 | 22D | N/A for Investigations |
| 15 | 22D | N/A for Investigations |
| 16 | 22D | N/A for Investigations |
| 17 | 22D | N/A for Investigations |
| 18 | 22D | N/A for Investigations |
| 19 | 22D | N/A for Investigations |
| 20 | 22D | N/A for Investigations |
| 21 | 22D | N/A for Investigations |
| 22 | 22D | N/A for Investigations |
| 23 | 22D | N/A for Investigations |
| 24 | 22D | Chassis |
| 25 | 22D | RTN Inhibit 1 |
| 26 | 22D | Inhibit 1 (+12 V/2A Power) |
| 27 | 22D | RTN for +12V/2A Power |
| 28 | 22D | +12V/2A Power |
| 29 | 22D | N/A for Investigations |
| 30 | 22D | N/A for Investigations |
| 31 | 22D | N/A for Investigations |
| 32 | 22D | N/A for Investigations |
| 33 | 22D | N/A for Investigations |
| 34 | 22D | N/A for Investigations |
| 35 | 22D | N/A for Investigations |
| 36 | 22D | N/A for Investigations |
| 37 | 22D | N/A for Investigations |

### 3.7.3 WV Environment

The WV is capable of providing a Class 100K environment as defined in FED-STD-209. The WV provides a removal efficiency of 99.97% for particulate matter of 0.3 microns are larger in aerodynamic diameter.

a. Investigations shall be safe when exposed to a WV negative pressure of $\geq$ 1.3 mbar relative to cabin pressure.

b. Investigation shall not cause an overpressurization of the WV, that being 20 mbar negative delta p and 15 mbar positive delta p.

c. Investigations shall be limited to the single containment quantity manipulation of up to 50 cc volume in the WV unless otherwise noted in Table XXXIV. These materials are compatible with the MSG WV, but Station may limit the use of them. Materials that could be released in the WV and any byproducts given off (etc. from combustion experiments) by the Investigation not listed in Table XXXIV or volumes larger than what is specified in Table XXXIV shall be approved by the IIT. See MSFC-PLAN-3052 for material usage approval process.

d. Investigations shall be compatible with the following WV dimensions listed below. Investigations, when mounted in the WV:

   - Shall leave adequate space from the front window, sideports and gloveports for crew interaction, see Figure 5.
   - Shall leave adequate space from the connectors and QDs shown in Figures 2 and 5.
   - Shall maintain a two inch (50.8mm) clearance form the filter banks so adequate air flow is maintained.

   Investigations that approach or exceed the exclusion zone described above shall be tested, per section 3.1.1.3 at the L-22 Investigation physical interface test, in the facility to insure there is no interference with MSG hardware during Investigation operations.

   The approximate Dimensions of the WV are:
   - Internal volume: 255 liters
   - Width: 906 mm
   - Depth bottom: 500 mm
   - Depth top: 385 mm
   - Height: 638 mm

e. Investigations or equipment articles which must be transferred to the WV through the 406 mm side port shall be compatible with the following dimensions:

- diameter: ≤ 406 mm
- area: 35 cm x 30 cm

f. Investigations requiring transfer to the WV through the airlock shall be limited in volume to the following dimensions:

- 25.4 cm x 34.3 cm x 29.9 cm (26 liters)
- Investigation will work with the IIT for transfer requirements/procedures and tray location/dimensions when using the airlock.

**Table XXXIV. WV Fluid Containment Quantities**

| Material | Amount Handled |
|---|---|
| Water | 50 cc |
| Cleaning solvents as required for LSE, cleaning equipment. | 50 cc |
| Ethanol | 50 cc |
| Methanol | 20 cc |
| Butanol | 50 cc |
| Decane | 50 cc |
| Heptane | 50 cc |
| Silicon Oils | 20 cc |
| Non-volatile combustible solid fuels: Paper, Polyethylene, PMMA (Plexiglass) | 50 cc |
| Glycerin | 50 cc |
| Chlorofluorocarbon (Refrigerants) | 50 cc |
| Electrolytic Fluids such as coppersulfate/acid solutions. | 50 cc |
| Polyethylene Glycol | 50 cc |
| Aqueous solutions with pH ranging from 3 to 9. | 50 cc |

### 3.7.4 Investigation Use of Cabin Atmosphere

#### 3.7.4.1 Active Air Exchange

Active air exchange with the cabin atmosphere by Investigation shall be limited to air exchange for specimen metabolic purposes and for mass conservation purposes.

#### 3.7.4.2 Oxygen Consumption

Investigations consumption of atmospheric oxygen shall not exceed 1.08 kg per day (2.38 lbs/day).

#### 3.7.4.3 Chemical Releases

Investigations that use chemicals that would create a toxicity problem or cause a hazard to ISS hardware if released shall provide adequate containment. Containment shall be provided by the use of a pressure vessel or the use of two or three redundantly sealed containers, depending on the toxicological hazard for a chemical with a vapor pressure below 15 psia. The Investigation must assure that each level of containment will not leak under the maximum use conditions (i.e. vibration, temperature, pressure, etc.)

#### 3.7.4.4 Cabin Air Cooling

Absorption of heat from the cabin air by investigation hardware operating outside the WV shall be no greater than the maximum values identified in the Unique Investigation ICD.

### 3.7.5 Ionizing Radiation Requirements

#### 3.7.5.1 Investigation Contained or Generated Ionizing Radiation

Investigations containing or using radioactive materials or that generate ionizing radiation shall be identified and approval obtained for their use.

#### 3.7.5.2 Ionizing Radiation Dose

Investigations should expect a total dose of ionizing radiation of 30 Rads(Si) per year.

#### 3.7.5.3 Single Event Effect (SEE) Ionizing Radiation

Investigations will be designed to not produce an unsafe condition or one that could cause damage to the MSG as a result of exposure to SEE ionizing radiation.

## 3.8 Fire Protection Interface Requirements

Investigations must not constitute an uncontrolled fire hazard to the ISS or other payloads. The minimum use of flammable materials shall be the preferred means of hazard reduction.

### 3.8.1 MSG WV Monitoring and Detection

The probability of fire and the detection thereof, for Investigations within the WV are dependent on many factors. These factors have been studied with the following results:

a. Smoke sensors in the Air Handling Unit (AHU) ducts are not used to detect fire inside the WV.

b. The MSG provides special power down features for the power interfaces contained within the work volume. If an over-temperature is detected in the WV power will be removed from the WV EXP OUTLETS 1,2,3 and the ICP power outlets.

c. The one WV air temperature analog sensor and four bilevel air temperature sensors located on the WV rear wall will be implemented to detect over-temperature possibly created by fire. The sensors trigger a message to the ISS Data Handling System (DHS) via the MIL-STD-1553B bus.

d. The MSG will provide operational modes without airflow in the WV; however, dependence on the air temperature sensors for fire detection requires airflow.

#### 3.8.1.1 Investigation Fire Detection

a. Fire detection shall be required where an investigation provides potential ignition sources and/or flammable materials. Some Investigations may, with hazard analysis and approval of the PSRP, rely on the fire detection capability of the MSG, as provided in section 3.8.1.c.

b. Investigations that require the use of flammable materials shall limit the quantity to minimize the risk.

c. Parameter monitoring may be implemented by the Investigation to meet the fire detection requirement, if the MSG does not provide adequate coverage. This monitoring shall provide warning to the ISS prior to the initiation of a combustion event in order to allow timely action by the crew and/or ground control. This parameter monitoring may be used in conjunction with the MSG fire detection capability as stated in section 3.8.1.c. The Investigation shall comply with section 3.3.1.1.7 when implementing fire detection/annunciation requirements.

d. Combustion investigations shall be performed under crew surveillance.

#### 3.8.1.2 Investigation Fire Suppression

The WV provides a fire suppression port for use of the ISS PFE. The fire suppression port is covered with a fire port sticker. Figure 25 shows the location of the WV fire suppression port.

a. Investigation shall provide a means for fire containment for any equipment that poses a credible risk of fire outside the envelope identified in paragraph 3.8.1.

b. Investigations hardware located outside the WV shall work with the IIT and PSRP on a case-by-case basis for fire detection and suppression requirements.

c. Investigation shall use materials and parts that meet the material requirements specified in paragraph 3.9 of this IRD.

## 3.9 Materials and Parts Interface Requirements

### 3.9.1 Materials and Parts Use And Selection

Investigations shall use materials and parts that meet the materials requirements specified in NSTS 1700.7, paragraphs 208.3 and 209 in their entirety, and NSTS 1700.7 ISS Addendum, paragraphs 208.3 and 209 in their entirety.

For those NASA centers which participate in the NASA Materials and Processes Intercenter Agreement for ISS payloads, the Intercenter Agreement baselines the process for selection and certification of materials used in payload hardware to the safety requirements of NSTS 1700.7 and NSTS 1700.7 ISS Addendum, paragraphs 208.3 and 209 in their entirety.

Whenever Possible, materials should be selected that have already been shown to meet the applicable acceptance test criteria. Existing test data are compiled in the NASA Marshall Space Flight Center (MSFC) Materials and Process Technical Information System (MAPTIS) electronic database. A hardcopy version of the MAPTIS database is published periodically as a joint document with Johnson Space Center (JSC), MSFC-HDBK-527/JSC 09694, Materials Selection List for Space Hardware Systems.

#### 3.9.1.1 Commercial Parts

Commercial/Off The Shelf (COTS) parts used in Investigations shall meet the materials requirements specified in Section 3.9.1.

#### 3.9.1.2 Additional Investigation Material Requirements

a. All Investigator hardware shall meet the toxicity offgassing acceptance requirements of NASA-STD-6001, Test 7.

b. Materials and byproducts used by the Investigation that are not listed in Table XXXIV of this IIRD shall be approved by the IIT prior to use.

c. Investigations using materials that are not listed in Table XXXIV shall provide for their own cleaning tools/wipes etc., in case of spillage and take care of waste disposal.

d. Investigation using materials that are not listed in Table XXXIV shall verify that the materials are compatible with the MSG gloves.

e. Investigations shall specify what materials to be dumped through the vacuum exhaust system.

f. Investigations that are to remain on-orbit for more than one year shall use fungus resistant materials.

g. Investigations shall develop crew procedure steps for cleaning up liquid spillage or other release of materials within the WV.

h. The Investigation shall provide disclosure of the contents (including flammability, pH, toxicity) of all substances/samples including proprietary material used in or produced by the investigation to the JSC Toxicology Group in accordance with NSTS/ISS 13830 and JSC 27472. The Investigation shall comply with the toxic labeling standards in NSTS 07700, Volume XIV.

### 3.9.2 Cleanliness

Investigations shall conform to Visibly Clean-Sensitive (VC-S) cleanliness requirements. Visibly clean is defined as the absence of all particulate and nonparticulate matter visible to the normal unaided eye.

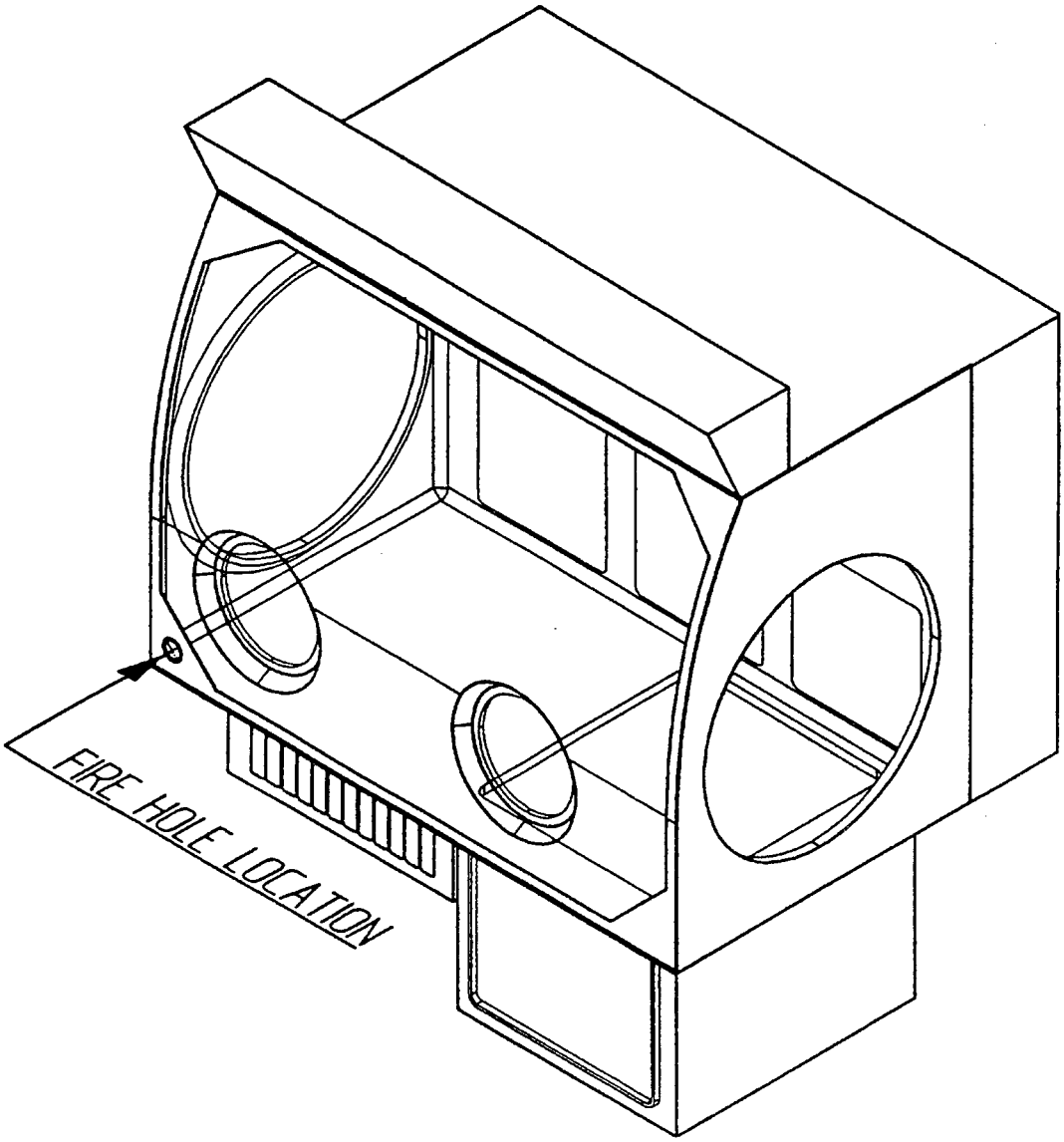


**Figure 25.** **WV Fire Suppression Port**

## 3.10 Human Factors Interface Requirements

### 3.10.1 Strength Requirements

Forces and torque's required to remove, replace, operate, control, and maintain payload hardware and equipment on-orbit shall be equal to or less than the strength values given below. For operation and control of payload hardware equipment:

a. Grip Strength – To remove, replace and operate payload hardware, grip strength required shall be less than 254 N (57lbf).

b. Linear Forces – Linear forces required to operate or control hardware or equipment shall be less than the strength values for the 5th percentile female, defined as 50% of the strength values shown in Figure 26.

c. Torques – Torques required to operate or control payload hardware or equipment shall be less than the strength values for the 5th percentile female, defined as 60% of the calculated 5th percentile male capability shown in Figure 27.

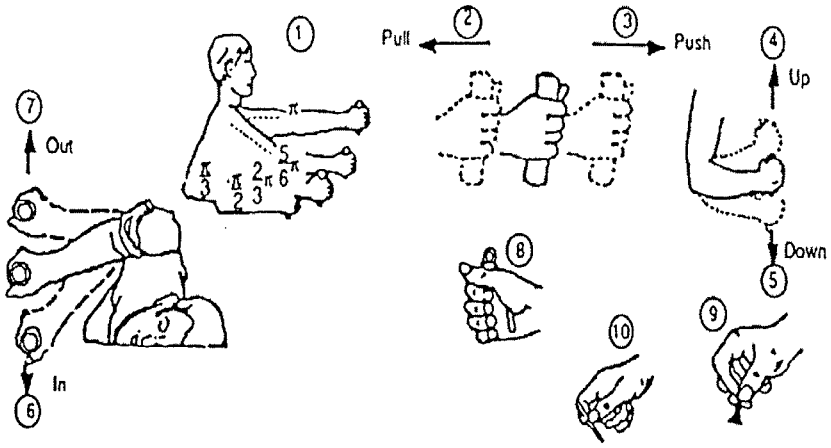


| Arm strength (N) | | | | | | | | | | | | |
|---|---|---|---|---|---|---|---|---|---|---|---|---|
| (1) | (2) | | (3) | | (4) | | (5) | | (6) | | (7) | |
| Degree of elbow flexion (rad) | Pull | | Push | | Up | | Down | | In | | Out | |
| | L** | R** | L | R | L | R | L | R | L | R | L | R |
| π | 222 | 231 | 187 | 222 | 40 | 62 | 58 | 76 | 58 | 89 | 36 | 62 |
| 5/6 π | 187 | 249 | 133 | 187 | 67 | 80 | 80 | 89 | 67 | 89 | 36 | 67 |
| 2/3 π | 151 | 187 | 116 | 160 | 76 | 107 | 93 | 116 | 89 | 98 | 45 | 67 |
| 1/2 π | 142 | 165 | 98 | 160 | 76 | 89 | 93 | 116 | 71 | 80 | 45 | 71 |
| 1/3 π | 116 | 107 | 96 | 151 | 67 | 89 | 80 | 89 | 76 | 89 | 53 | 76 |

| Hand and thumb-finger strength (N) | | | | |
|---|---|---|---|---|
| | (8) | | (9) | (10) |
| | Hand grip | | | |
| | L | R | Thumb-finger grip (Palmer) | Thumb-finger grip (tips) |
| Momentary hold | 250 | 260 | 60 | 60 |
| Sustained hold | 145 | 155 | 35 | 35 |

* Elbow angle shown in radians
** L = Left; R = Right

| Arm strength (lb) | | | | | | | | | | | | |
|---|---|---|---|---|---|---|---|---|---|---|---|---|
| (1) | (2) | | (3) | | (4) | | (5) | | (6) | | (7) | |
| Degree of elbow flexion (deg) | Pull | | Push | | Up | | Down | | In | | Out | |
| | L | R* | L | R | L | R | L | R | L | R | L | R |
| 180 | 50 | 52 | 42 | 50 | 9 | 14 | 13 | 17 | 13 | 20 | 8 | 14 |
| 150 | 42 | 56 | 30 | 42 | 15 | 18 | 18 | 20 | 15 | 20 | 8 | 15 |
| 120 | 34 | 42 | 26 | 36 | 17 | 24 | 21 | 26 | 20 | 22 | 10 | 15 |
| 90 | 32 | 37 | 22 | 36 | 17 | 20 | 21 | 26 | 16 | 18 | 10 | 16 |
| 60 | 26 | 24 | 22 | 34 | 15 | 20 | 18 | 20 | 17 | 20 | 12 | 17 |

| Hand, and thumb-finger strength (lb) | | | | |
|---|---|---|---|---|
| | (8) | | (9) | (10) |
| | Hand grip | | | |
| | L | R | Thumb-finger grip (Palmer) | Thumb-finger grip (tips) |
| Momentary hold | 56 | 59 | 13 | 13 |
| Sustained hold | 33 | 35 | 8 | 8 |

* Left; R = Right

**Figure 26. <u>Arm, Hand and Thumb/Figure Strength</u>**
**( 5th Percentile Male Data )**

| | Unpressurized suit, bare handed | |
|---|---|---|
| | Mean | SD |
| 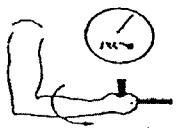 Maximum torque: Suppination, Nm (lb-in.) | 13.73 (121.5) | 3.41 (30.1) |
| 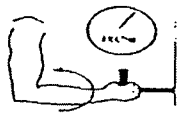 Maximum torque: Pronation, Nm (lb-in.) | 17.39 (153.9) | 5.08 (45.0) |

**Figure 27. <u>Torque Strength</u>**

### 3.10.2 Habitability

### 3.10.2.1 Housekeeping

#### 3.10.2.1.1 Closures Or Covers

Investigations closure/cover shall be provided for any area of the payload that is not designed for routine cleaning.

#### 3.10.2.1.2 Built -In Control

a. Investigation containers of liquids or particulate matter shall have built-in equipment/methods for control of vaporization, material overflow, or spills.

b. Investigations capture elements, including grids, screens, or filter surfaces shall be accessible for replacement or cleaning without dispersion of the trapped materials.

#### 3.10.2.1.3 One-Handed Operation

Investigation cleaning equipment and supplies shall be designed for one-handed operation or use.

#### 3.10.2.1.4 Deleted

### 3.10.2.2 Touch Temperature

#### 3.10.2.2.1 Continuous/Incidental Contact-High Temperature

Investigations surfaces whose temperature exceeds 49° C (120° F), which are subject to continuous or incidental contact, are exposed to crewmember's bare skin contact, protective equipment shall be provided to the crew and warning labels shall be provided at the surface site, see NSTS 18798 Interpretation letter MA2-95-048.

#### 3.10.2.2.2 Continuous/Incidental Contact-Low Temperature

Investigations surfaces below –18° C (0° F), which are subject to continuous or incidental contact, are exposed to crewmember's bare skin contact, protective equipment shall be provided to the crew and warning labels shall be provided at the surface site, see NSTS 18798 Interpretation letter MA2-95-048.

#### 3.10.2.2.3 Acoustic Requirements

a. Investigation equipment with moving parts (etc. fans) shall comply with the acoustic requirements in Table XXXV. The investigation shall perform an acoustics test on the hardware with moving parts to see if the requirements are met, if the requirements can't be met then an integrated test can be performed with the MSG engineering unit to see if the WV will help attenuate any noise.

b. Investigation equipment with moving parts (etc. fans) shall not exceed the SPL limits during the Maximum Rack Noise Duration as specified in Table XXXVI when the equipment is operating in the loudest expected configuration and mode of operation that can occur on orbit under planned operations. The investigation shall perform an acoustics test on the hardware with moving parts to see if the requirements are met, if the requirements can't be met, then an integrated test can be performed with the MSG engineering unit to see if the WV will help attenuate any noise.

**Table XXXV . Investigation Continuous Noise Requirements**

| Overall Investigation A-Weighted SPL (dBA) | |
|---|---|
| **Frequency Band (Hz)** | **Investigation SPL Limit (dB)** |
| 63 | 61 |
| 125 | 53 |
| 250 | 47 |
| 500 | 42 |
| 1,000 | 38 |
| 2,000 | 36 |
| 4,000 | 35 |
| 8,000 | 34 |

Note: The Investigation SPL is to be measured at a distance of 0.6 meters from the test article or 0.6 meters from the integrated rack.

**Table XXXVI. Investigation Intermittent Noise Limits**

| Noise Limits Measured at 0.6 meters distance from test article | |
|---|---|
| **Maximum Noise Duration** | **Investigation SPL Limit (dB)** |
| 8 Hours | 49 |
| 7 Hours | 50 |
| 6 Hours | 51 |
| 5 Hours | 52 |
| 4 Hours | 54 |
| 3 Hours | 57 |
| 2 Hours | 60 |
| 1 Hours | 65 |
| 30 Minutes | 69 |
| 15 Minutes | 72 |
| 5 Minutes | 76 |
| 2 Minutes | 78 |
| 1 Minutes | 79 |
| Not Allowed | 80 |

#### 3.10.2.2.4 Lighting Design

Investigation lighting sources shall be dimmable.

### 3.10.3 Structural/Mechanical Interfaces

#### 3.10.3.1 Equipment Mounting

Investigations items used during nominal operations and planned maintenance shall be designed, labeled, or marked to protect against improper installation.

#### 3.10.3.2 Unique Tools

Investigation provided unique tools shall meet the applicable requirements defined as applicable in the MSG IIRD. Power tools shall be designed so the battery packs can be replaced and have a level-of-charge indicator or an indicator as to when the battery pack is required to be replaced or recharged.

#### 3.10.3.3 Connectors

Investigation connectors shall meet the following requirements.

##### 3.10.3.3.1 One-Handed Operation

All Investigation ORU connectors, whether operated by hand or tool, shall be designed and placed so they can be mated/demated using either hand.

##### 3.10.3.3.2 Accessibility

Investigation connectors shall be designed so it is possible to mate/demate individual connectors without having to remove or mate/demate other connectors. Electrical connectors and cable installations shall permit disconnection and reconnection without damage to wiring connectors.

##### 3.10.3.3.3 Ease of Disconnect

Electrical connectors shall require no more than two turns to disconnect.

##### 3.10.3.3.4 Self Locking

Payload electrical connectors shall provide a self-locking feature.

##### 3.10.3.3.5 Connector Arrangement

Space between connectors and adjacent obstructions shall be a minimum of 25mm (1 inch) for access. Connectors in a single row or staggered rows which are removed sequentially by the crew shall provide 25mm (1inch) of clearance from other connectors and/or adjacent obstructions for 270 degrees of sweep around each connector beginning at the start of its removal/replacement sequence.

#### 3.10.3.3.6 Arc Containment

Electrical connector plugs shall be designed to confine/isolate the mate/demate electrical arcs or sparks.

#### 3.10.3.3.7 Connector Protection

Protection shall be provided for all demated connectors against physical damage and contamination.

#### 3.10.3.3.8 Connector Shape

Investigations connectors shall use different connector shapes, sizes or keying to prevent mating connectors when lines differ in content.

#### 3.10.3.3.9 Fluid and Gas Line connectors

Investigations fluid and gas connectors that are mated and demated shall be located and configured so that they can be visually inspected for leakage.

#### 3.10.3.3.10 Coding

Both halves of mating connectors shall display a code or identifier that is unique to that connection. The labels or codes on connectors shall be located so they are visible when connected or disconnected.

#### 3.10.3.3.11 Pin Identification

Each pin shall be uniquely identifiable in each electrical plug and each electrical receptacle. At least every 10th pin must be labeled.

#### 3.10.3.3.12 Orientation

Grouped plugs and receptacles shall be oriented so that the aligning pins or equivalent devices are in the same relative position.

#### 3.10.3.3.13 Alignment Marks or Guide Pins

Mating parts shall have alignment marks in a visible location during mating or guide pins (or their equivalent).

### 3.10.3.4 Fasteners

Investigation provided fasteners that are removed on-orbit shall meet the following requirements.

#### 3.10.3.4.1 Non-Threaded Fasteners Status Indication

An indication of correct engagement (hooking, latch fastening, or proper positioning of interfacing parts) of non-threaded fasteners shall be provided.

#### 3.10.3.4.2 Mounting Bolt/Fastener Spacing

Clearance around fasteners to permit fastener hand threading (if necessary) shall be a minimum of 0.5 inches for the entire circumference of the bolt head and a minimum of 1.5 inches over 180 degrees of the bolt head and provide the tool handle sweep as seen in Figure 28.

#### 3.10.3.4.3 Multiple Fasteners

When several fasteners are used on one item they shall be of identical type.

#### 3.10.3.4.4 Captive Fasteners

All fasteners planned to be installed and/or removed on-orbit shall be captive when disengaged.

| Opening dimensions | | Task |
|---|---|---|
| 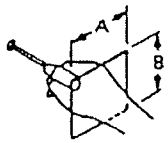 | A 117 mm (4.6 in)<br>B 107 mm (4.2 in) | Using common screw-driver with freedom to turn hand through 180° |
| 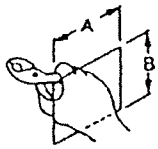 | A 133 mm (5.2 in)<br>B 115 mm (4.5 in) | Using pliers and similar tools |
| 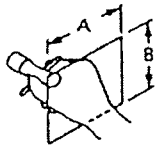 | A 155 mm (6.1 in)<br>B 135 mm (5.3 in) | Using T-handle wrench with freedom to turn wrench through 180° |
| 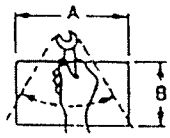 | A 203 mm (8.0 in)<br>B 135 mm (5.3 in) | Using open-end wrench with freedom to turn wrench through 62° |
| 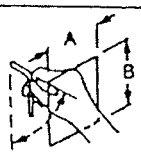 | A 122 mm (4.8 in)<br>B 155 mm (6.1 in) | Using Allen-type wrench with freedom to turn wrench through 62° |

**Figure 28. Minimal Clearance for Tool-Operated Fasteners**

### 3.10.3.4.5 Quick Release Fasteners

Quick release fasteners shall require a maximum of one complete turn to operate (quarter –turn fasteners are preferred). Quick release fasteners shall be positive locking in open and closed positions.

### 3.10.3.4.6 Threaded Fasteners

Only right handed threads shall be used.

#### 3.10.3.4.7 Over Center Latches

Nonself-latching – Over center latches shall include a provision to prevent undesired latch element realignment, interface, or reengagement.

Latch lock – Latch catches shall have locking features.

Latch handles – If the latch has a handle, the latch handle and latch release shall be operable by one hand.

#### 3.10.3.4.8 Winghead Fasteners

Winghead fasteners shall fold down and be retained flush with surfaces.

#### 3.10.3.4.9 Fastener Head Type

Hex type external or internal grip or combination head fasteners shall be used where on-orbit crew actuation is planned. If a smooth surface is required, flush or oval head internal hex grip fasteners shall be used for fastening. Slotted fasteners shall not be used to carry launch loads for hard-mounted equipment. Slotted fasteners are allowed in non-structural applications (e.g., computer data connectors, stowed commercial equipment).

#### 3.10.3.4.10 One-Handed Actuation

Fasteners planned to be removed or installed on-orbit shall be designed and placed so they can be mated/demated using either hand.

#### 3.10.3.4.11 Deleted

#### 3.10.3.4.12 Access Holes

Covers or shields through which mounting fasteners must pass for attachment to the basic chassis of the unit shall have holes for passage of the fastener without precise alignment (and hand or necessary tool if either is required to replace).

### 3.10.4 Controls and Displays

Investigation controls and displays shall meet the following requirements.

#### 3.10.4.1 Controls Spacing Design Requirements

All spacing between controls and adjacent obstructions shall meet the minimum requirements for ungloved operations as shown in Figure 29. When operations require gloved hands the preferred requirements shall be meet.

### 3.10.4.2 Protective Methods

Payloads shall provide protection against accidental control actuation using one or more of the protective methods listed in sub–paragraphs a. through c. below. Infrequently used controls (i.e. those used for calibration) should be separated from frequently used controls. Leverlock switches or switch covers are strongly recommended for switches related to mission success. Switch guards may not be sufficient to prevent accidental actuation.

a. Recess, shield, or otherwise surround the controls by physical barriers. The control shall be entirely contained within the envelope described by the recess or barrier.

b. Cover or guard the controls. Safety or lock wire shall not be used.

c. Cover guards when open shall not cover or obscure the protected control or adjacent controls.

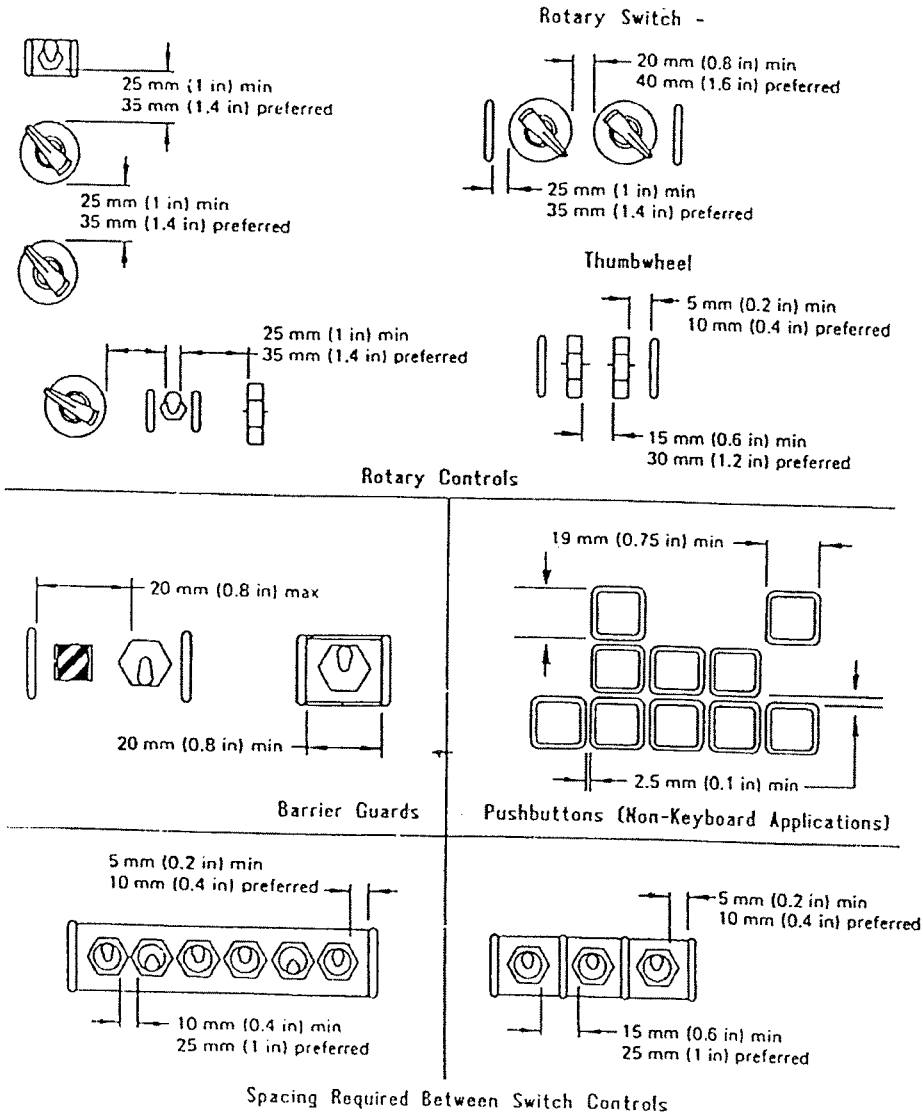


**Figure 29. <u>Control Spacing Requirements</u>**

### 3.10.4.3 Noninterference

Investigation provided protective devices shall not cover or obscure other displays or controls.

### 3.10.4.4 Barrier Guards

Barrier guard spacing shall adhere to the requirements for use with the toggle switches, rotary switches, and thumbwheels as shown in Figures 29 and 30.

### 3.10.4.5 Recessed Switch Protection

When a barrier guard is not used, rotary switches that control critical functions shall be recessed as shown in Figure 30.

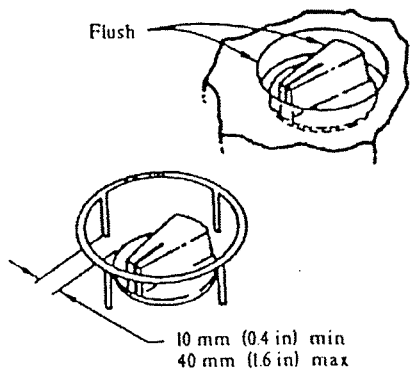


**Figure 30. Rotary Switch Guard**

### 3.10.4.6 Position Indication

When payload switch protective covers are used, control position shall be evident without requiring cover removal.

### 3.10.4.7 Hidden Controls

Controls that cannot be directly viewed will be avoided. If present, hidden controls shall be guarded to protect against inadvertent actuation.

### 3.10.4.8 Hand Controllers

Hand controllers, excluding trackballs and mouse, shall have a separate on/off control to prevent inadvertent actuation when the controller is not in use.

### 3.10.4.9 Valve Controls

Requirements for design of investigation valve controls are defined as follows:

a. Low-Torque Valves – Valves requiring 1 N–m (10 in–lb) or less for operation are classified as "low-torque" valves and shall be provided with a "central pivot" type handle, 5.5 cm (2.25 in) or less in diameter. (see Figure 31)

b. Intermediate-Torque Valves – Valves requiring between 1 and 2 N–m (10 and 20 in–lb) for operation are classified as "intermediate torque" valves and shall be provided with a "central pivot" type handle, 5.5 cm (2.25 in) or greater in diameter, or a "lever (end pivot type" handle, 7.5 cm (3 in) or greater in length.

c. High-Torque Valves – Valves requiring 2 N–m (20 in–lb) or more for operation are classified as "high-torque" valves and shall be provided "lever type" handles greater than 7.5 cm (3 in) or greater in length.

d. Handle Dimensions – Valve handles shall adhere to the clearances and dimensions illustrated in Figures 31, Valve Handle-Central Pivot Type and Figure 32, Valve Handle-Lever Type.

e. Rotary Valve Controls – Rotary valve controls shall open the valve with a counter-clockwise motion.

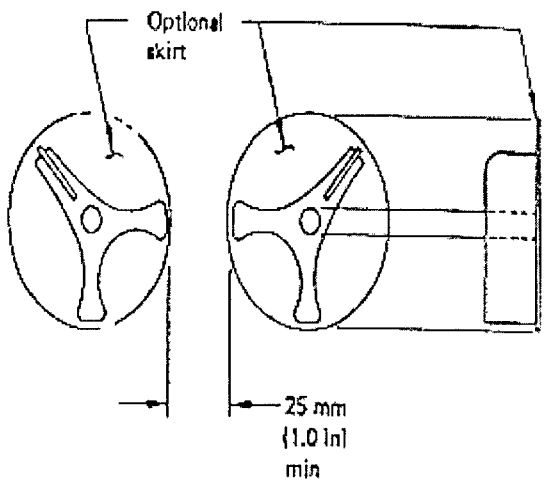


**Figure 31.** **Valve Handle – Central Pivot Type**

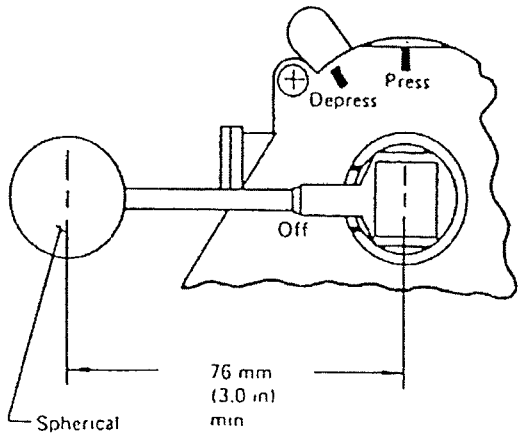


**Figure 32.** **Valve Handle – Lever Type**

### 3.10.4.10 Toggle Switches

Dimensions for a standard toggle switch shall conform to the values presented in Figure 33.

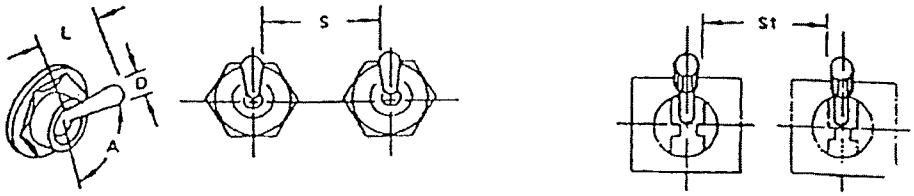


| | Dimensions | | Resistance | |
|---|---|---|---|---|
| | L<br>Arm length | D<br>Control tip | Small switch | Large switch |
| Minimum | 13 mm<br>(1/2 in) | 3mm<br>(1/8 in) | 2.8 N<br>(10 oz) | 2.8 N<br>(10 oz) |
| Maximum | 50 mm<br>(2 in) | 25 mm<br>(1 in) | 4.5 N<br>(16 oz) | 11 N<br>(40 oz) |

| | Displacement between positions | |
|---|---|---|
| | 2 position | 3 position |
| Minimum | 30° | 17° |
| Maximum | 80° | 40° |
| Desired | | 25° |

| | Separation | | | |
|---|---|---|---|---|
| | Single finger operation | | Single finger sequential operation | Simultaneous operation by different fingers |
| Minimum | 19 mm<br>(3/4 in) | 25 mm<br>(1 in) | 13 mm<br>(1/2 in) | 16 mm<br>(5/8 in) |
| Optimum | 50 mm<br>(2 in) | 50 mm<br>(2 in) | 25 mm<br>(1 in) | 19 mm<br>(3/4 in) |

**Figure 33. Toggle Switches**

### 3.10.5 Deleted

### 3.10.5.1 Stowage Container Contents Restraints

a. Investigation container (i.e. small parts box, sample holder) contents shall be restrained in such a way that the items do not float when the container is opened or closed.

b. Investigation container contents shall be restrained in a way such that the items do not jam the drawer when the container is opened or closed.

c. Investigation container contents shall be restrained in such a way that the contents can be removed/replaced without using a tool.

#### 3.10.5.2 Stowage and Equipment Containers

a. Investigation container (i.e. small parts box, sample holder) latches, handles, and operating mechanisms shall be designed to be latched/unlatched and opened/closed with one hand by the 95th percentile American male to the 5th percentile female.

b. The design of latches shall be such that their status (locked/unlocked) can be determined through visual inspection.

#### 3.10.5.3 Captive Parts

Investigation equipment shall be designed in such a manner to ensure that all unrestrained parts (e.g., locking pins, knobs, handles, lens covers, access plates, or similar devices) that may be temporarily removed on orbit will be tethered or otherwise held captive. The MSG provides Velrco Strips that may be attached within the WV for restraining investigation equipment.

#### 3.10.5.4 Handles

Handles on Investigation hardware shall be designed in accordance with the minimum applicable dimensions in Figure 34.

#### 3.10.5.5 Handle Location/Front Access

Handles and grasp areas shall be placed on the accessible surface of a payload item consistent with the removal direction.

### 3.10.6 Handle Dimensions

Handles for movable or portable units shall be designed in accordance with the minimum applicable dimensions in Figure 34.

| Illustration | Type of handle | Dimensions in mm (in inches) (Bare hand) X | Y | Z |
|---|---|---|---|---|
| 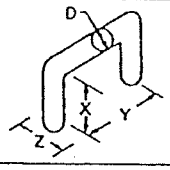 | Two-finger bar<br>One-hand bar<br>Two-hand bar | 32 (1–1/4)<br>48 (1–7/8)<br>48 (1–7/8) | 65 (2–1/2)<br>111 (4–3/8)<br>215 (8–1/2) | 75 (3)<br>75 (3)<br>75 (3) |
| 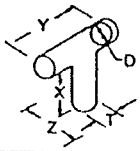 | T-bar | 38 (1–1/2) | 100 (4) | 75 (3) |
| 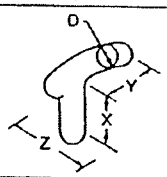 | J-bar | 50 (2) | 100 (4) | 75 (3) |
| 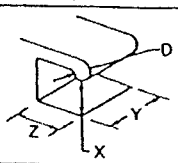 | Two-finger recess<br>One-hand recess | 32 (1–1/4)<br>50 (2) | 65 (2–1/2)<br>110 (4–1/4) | 75 (3)<br>90 (3–1/2) |
| 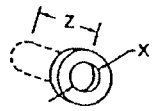 | Finger-tip recess<br>One-finger recess | 19 (3/4)<br>32 (1–1/4) | –<br>– | 13 (1/2)<br>50 (2) |

| Curvature of handle or edge (DOES NOT PRECLUDE USE OF OVAL HANDLES) | Weight of Item | Minimum diameter | |
|---|---|---|---|
| | Up to 6.8 kg (up to 15 lbs) | D = 6 mm (1/4 in) | Gripping efficiency is best if finger can curl around handle or edge to any angle of 2/3 π rad (120°) or more |
| | 6.8 to 9.0 kg (15 to 20 lbs) | D = 13 mm (1/2 in) | |
| | 9.0 to 18 kg (20 to 40 lbs) | D = 19 mm (3/4 in) | |
| | Over 18 kg (over 40 lbs) | D = 25 mm (1 in) | |
| | T-bar post | T = 13 mm (1/2 in) | |

**Figure 34. Minimum Handle Dimensions**

### 3.10.7 Identification Labeling

The development of labels shall be a joint process requiring the cooperative efforts of ISS Payload Label Approval Team (IPLAT) at JSC, MSG Investigation Integration Team and the MSG Investigator.

The Investigator shall provide label drawings, label location drawings and information sufficient to enable IPLAT to determine that the labeling instructions are met. The

labeling instructions are found in Appendix C of this document. The Investigator shall coordinate with the MSG Integration Team before submitting the label drawings for approval. IPLAT is responsible for reviewing all payload labels, providing guidance to the MSG Team/Investigator and granting approval. IPLAT is also responsible for performing a human engineering assessment of the labels and ensuring the labels are appropriate from a human engineering perspective including commonality, standardization, and operations nomenclature.

Decals needed by the Investigators that are available in JSC 27260, Decal Process Document and Catalog must be obtained from the Decal Design & Production Facility (DDPF). Examples of labels found in the catalog are: IMS, PFE, toxicology, hazardous, cautions and warning, rack power switch, fire indicators, etc. The DDPF is also available to the Investigators for fabricating labels not found in JSC 27260.

### 3.10.8 Crew Safety

#### 3.10.8.1 Electrical Hazards

Electrical equipment other than bioinstrumentation equipment shall incorporate the following controls as specified below:

a. If the exposure condition is below the threshold for shock (i.e., below maximum leakage current and voltage requirements as defined within this section), no controls are required. Non–patient equipment with internal voltages not exceeding 30 volts rms or dc nominal (32 volts rms or dc maximum) shall contain potentials below the threshold for electrical shock.

b. If the exposure condition exceed the threshold for shock, but is below the threshold of the let-go current profile (critical hazard) as defined in Table XVI, two independent controls (e.g., a safety (green) wire, bonding, insulation, leakage current levels below maximum requirements) shall be provided such that no single failure, event, or environment can eliminate more than one control.

c. If the exposure condition exceeds both the threshold for shock and the threshold of the let-go current profile (catastrophic hazardous events) as defined in Table XVI, three independent controls shall be provided such that no combination of two failures, events or environments can eliminate more than two controls.

d. If two dependent controls are provided, the physiological effect that a crew member experiences as a result of the combinations of the highest internal voltage applied to or generated within the equipment and the frequency and wave form associated with a worst case credible failure shall be below the threshold of the let-go current profile as defined in Table XVI.

e. If it cannot be demonstrated that the hazard meets the conditions of paragraph A, B, or C above, three independent hazard controls shall be provided such that no

combination of two failures, events or environments can eliminate more than two controls.

### 3.10.8.2 Mismatched

The design of electrical connectors shall make it impossible to inadvertently reverse a connection or mate the wrong connectors if a hazardous condition can be created. Payload and on-orbit support equipment, wire harnesses, and connectors shall be designed such that no blind connections or disconnections must be made during payload installation, operation, removal, or maintenance on orbit or during ground operations at KSC unless the design includes scoop proof connectors or other protective features.

For payload equipment, for which mismating or cross-connection may damage ISS or MSG provided equipment, plugs, and receptacles (connectors), shall be selected and applied such that they cannot be mismatched or cross-connected in the intended system as well as adjacent systems. Although identification markings or labels are required, the use of identification alone is not sufficient to preclude mismating.

For all other payload connections, combinations of identification, keying and clocking, and equipment test and checkout procedures shall be employed at the payload's discretion to minimize equipment risk while maximizing on-orbit operability.

### 3.10.8.3 Overload Protection

#### 3.10.8.3.1 Device Accessibility

An overload protective device shall not be accessible without opening a door or cover, except that an operating handle or operating button of a circuit breaker, the cap of an extractor-type fuse holder, and similar parts may project outside the enclosure.

#### 3.10.8.3.2 Extractor –Type Fuse Holder

The design of the extractor-type fuse holder shall be such that the fuse is extracted when the cap is removed.

#### 3.10.8.3.3 Overload Protection Location

Overload protection (fuses and circuit breakers) intended to be manually replaced or physically reset on-orbit shall be located where they can be seen and replaced or reset without removing other components.

#### 3.10.8.3.4 Overload Protection Identification

Each overload protector (fuse or circuit breaker) intended to be manually replaced or physically reset on-orbit shall be readily identified or keyed for its proper value.

#### 3.10.8.3.5 Automatic Restart Protection

Controls shall be employed that prevent automatic restarting after an overload-initiated Shutdown.

### 3.10.8.4 Sharp Edges and Corners Protection

Investigation design within a pressurized module shall protect crewmembers from sharp edges and corners during all crew operations. Translation paths and adjacent equipment shall be designed to minimize the possibility of entanglement or injury to crewmembers.

#### 3.10.8.4.1 Holes

Holes that are round or slotted in the range of 10.0 to 25.0 mm (0.4 to 1.0 in.) shall be covered.

#### 3.10.8.4.2 Latches

Latches that pivot, retract, or flex so that a gap of less than 35 mm (1.4 in) exists shall be designed to prevent entrapment of a crewmember's appendage.

#### 3.10.8.4.3 Screws and Bolts

Threaded ends of screws and bolts accessible by the crew and extending more than 3.0 mm (0.12 in) shall be capped to protect against sharp threads.

#### 3.10.8.4.4 Securing Pins

Securing pins shall be designed to prevent their inadvertently backing out above the handhold surface.

#### 3.10.8.4.5 Levers, Cranks, Hooks, and Controls

Levers, cranks, hooks, and controls shall not be located where they can pinch, snag, or cut the crewmembers or their clothing.

#### 3.10.8.4.6 Burrs

Exposed surfaces shall be free of burrs.

#### 3.10.8.4.7 Lockwire

Investigations shall not use safety/lock wires on any fasteners.

### 3.10.9 Payload In-Flight Maintenance

Investigation hardware designed to be maintainable shall use Space Station provided on-board tools. A list of available tools for on-orbit use can be found at:
http://iss-www.jsc.nasa.gov/ss/issapt/opsipt/mresup/mresup_home.html

### 3.10.10 Deleted

### 3.10.11 Egress

Investigations egress requirements shall be in accordance with 1700.7, ISS Addendum, paragraph 205.

## 3.11 Safety

Investigations shall comply with the safety requirements contained in section 4.3 of this document.

## 4.0 VERIFICATION

This section comprises a plan for the accomplishment of all MSG interface and identified safety verification requirements levied upon the MSG Investigator hardware. These requirements are the basis for a verification program that will demonstrate that the Investigator hardware satisfies performance, functionality, safety, and interface requirements. These verification requirements will ensure the MSG capacity to perform mission objectives both safely and efficiently for International Space Station Increment flights.

Verification activities can include demonstration (functionality / performance), testing, inspection, and analysis, which will be conducted primarily at the Investigators home center. Special verification requirements may be levied, should the Investigation have a unique hazard identified or a direct interface with the ISS Module (i.e. data, power, etc.). Several of the verification requirements will be satisfied with integrated systems level tests (i.e. MSG Ground Unit plus the Investigators flight hardware) and those will be identified in the Investigation Verification Applicability Matrix. Some late verification activities may be performed at the Kennedy Space Center (KSC). Within the Verification Applicability Matrix and Verification Definition Sheets, you are referenced to paragraph(s) in this document that detail each requirement. Paragraphs that say **"the Investigator shall"** indicates that the requirement must be verified. Paragraphs that say **"the Investigator will"** are for design information only, and need not be verified. Only the "shall" statements (items that must be verified) are identified in the matrix contained in this document. Verification Definition Sheets (VDS), which define the data required for verification closure of each requirement in the matrix, are included in Appendix E of this document.

Based on the requirements from this document, which are determined by the Investigator to be applicable to their investigation, a similar matrix will be developed and included in the Unique Investigation ICD prepared for that investigation. The Verification Applicability Matrix developed for the Investigation ICD will be a subset of the matrix contained in this document and will include only the requirements applicable to that investigation. The verification items to be included in the Unique Investigation Matrix will be negotiated and approved by the IIT. The approved Investigation Unique Verification Matrix will identify the appropriate VDS number from Appendix E of this document that corresponds to the applicable requirement.

The Investigation Applicability Matrix in the unique Increment Investigation ICD addresses the following areas:

1.0 Structural/Mechanical and Microgravity and Stowage Interface Requirements
2.0 Electrical Interface Requirements
3.0 Command and Data Handling Interface Requirements
4.0 Video and Audio Interface Requirements

5.0 Thermal Control Interface Requirements
6.0 Vacuum System Interface Requirements
7.0 Pressurized Gases Interface Requirements
8.0 Environmental Interface Requirements
9.0 Fire Protection Interface Requirements
10.0 Materials and Parts Interface Requirements
11.0 Human Factors Interface Requirements
12.0 Safety Requirements

## 4.1 Responsibilities

The MSG Integration Team is responsible for allocating and tracking the integrated rack level requirements levied on the Investigation Developer. The Investigation Developer is responsible for providing certification of compliance for all applicable verification requirements in this document. Applicable requirements are identified in the Verification Applicability Matrices in the unique Increment Investigation ICD. The Investigation Developer is also responsible for providing all data/test results required in this section. The MSG Integration Team is responsible for review and approval of the verification data required for each investigation.

## 4.2 Verification Methods

All Investigator hardware interfaces shall be verified by test, analysis, inspection, demonstration, or a combination of these methods. The method(s) of verification for each requirement is identified in Table XXXVII, Investigator Verification Applicability Matrix, and reflects the acceptable method(s) of closure. The methods of verification and minimum criteria for use are defined below.

### 4.2.1 Analysis

Analysis is a technical evaluation that relates equipment design and use parameters for prediction of actual design and operation. Analysis may be used to verify requirements, provided established techniques used are adequate to yield confidence, or where testing is impractical. Included in this category is analysis of similarity to items previously verified to the same criteria or more stringent criteria. Verification accomplished by analysis shall be evidenced by an analysis report.

### 4.2.2 Test

Test is actual operation of equipment under simulated conditions or the subjection of equipment to specified environments to measure responses. When analysis or inspection is specified as the method of verification, testing may be used to satisfy the requirement if preferred by the hardware developer, if it is cost effective, and if the Microgravity

Science Glovebox Integration Manager agrees. Verification accomplished by test shall be evidenced by a test report.

### 4.2.3 Inspection

Inspection is a physical evaluation of equipment and associated documentation. Inspection may be used to verify construction features, drawing compliance, workmanship, and physical condition. It includes determination of physical dimensions. Verification accomplished by inspection shall be evidenced by an inspection report.

### 4.2.4 Demonstration

Demonstration is the qualitative determination of compliance with requirements by observation during actual operation or simulation under preplanned conditions and guidelines.

## 4.3 Safety Verification Requirements

### 4.3.1 Flight

Safety requirements are found in NSTS 1700.7, Safety Policy and Requirements for Payloads Using the Space Transportation System and NSTS 1700.7 ISS Addendum, Safety Policy and Requirements for Payloads Using the International Space Station. Information on Payload Safety Reviews and required data is found in NSTS 13830, Payload Safety Review and Data Submittal Requirements. The investigator shall submit safety verification data as specified by the investigator developed payload hazard reports. Table XXXVII, Investigator Verification Requirements Matrix, lists safety related requirements applicable to standard (generic) hazards as defined in JSC Form 1230 as well as two unique hazards that may be applicable to most investigations (release of experiment materials and pressurized lines, fittings, and components). Verification data must reflect the as-built configuration and provided for all flight hardware and flight backup hardware. For payloads that have previously flown as STS payloads, verification requirements will be developed using the guidelines established by the baselined payload hazard reports and will include safety impact of any design changes from the baseline mission. For new payloads, verification requirements will be developed based on JSC Form 1230 and payload unique hazard reports (if any).

### 4.3.2 Ground

Ground safety requirements are found in KHB 1700.7, Space Shuttle Payload Ground Safety Handbook. Information on Ground Safety Reviews and required data is found in NSTS 13830, Payload Safety Review and Data Submittal Requirements. The investigator shall submit ground safety verification data as specified by the investigator developed ground safety hazard reports.

### 4.3.3 General

This IIRD is intended to summarize safety verification data required to satisfy the NSTS payload safety review process. However, verification requirements may change as a normal result of this process, and in such cases requirements in Table XXXVII will be amended to reflect results of the safety review process when payload specific verification requirements documents are developed. The ultimate source for payload specific safety verification data will be signed Phase III payload hazard reports for new payloads or Phase III approved reverification matrix for reflight payloads.

The MSG Integration Manager shall be responsible for performing an integrated safety assessment for all payload operations inside the Microgravity Science Glovebox, per MSFC-PLAN-3052.

## 5.0 VERIFICATION APPLICABILITY MATRIX

### 5.1 Purpose

The Investigator Verification Applicability Matrix, Table XXXII, lists the Microgravity Science Glovebox Investigation Integration Team Interface and Safety Verification Requirements for Investigator hardware with associated verification methods. The Applicable(A) or Non-Applicable(N/A) and a schedule for data submittal of each hardware element will be developed on a case-by-case basis.

Definitions of Column Headings
for Verification Requirements Table XXXVIII

| | |
|---|---|
| Requirement Number | Identifies verification requirements by number and the item status is tracked by using this number. |
| Requirement Title | Identifies the requirement. |
| Safety Related | Identifies those items required to satisfy a Hazard control. |
| MSG IIRD Paragraph | Defines the interface being used and the verification activity required for use of that interface. |
| Verification Method(s) | Defines the method(s) required to perform the verification function. |
| Hardware Item(s) | Defines each hardware element (i.e. Exp. Control Box, Exp. Sample Container, etc.) and its applicability to the requirement. |
| Due Date | Defines the date that the verification package is due to the Integration Manager. |
| Remarks | Defines the Verification Data Sheet number or if it is a PSRP/Safety requirement. |

Table XXXVII, Investigator Verification Applicability Matrix, identifies three items relevant to each verification requirement and hardware element. The items identified are: (1) the method(s) of verification, or the acceptable certification, if allowed. Acceptable methods of verification are denoted by: Analysis ("A"), Test ("T"), Inspection ("I"), and Demonstration (D). The requirements that have (PSRP) in the methods column are included for completeness of the design requirements. It is the responsibility of the Investigation to address these requirements through the PSRP. For a more detailed description of the methods and certifications, see Section 4.2, Verification Methods. (2) The date which the verification data is due. The due date is agreed to by both the Investigator and the MSG Integration Manager. (3) The applicable Verification Data Sheet associated with the requirement number.

# Table XXXVII MSG INVESTIGATION APPLICABILITY MATRIX

| MSG IIRD Reqmt. No. | Requirement Statement | Safety | Ref. Reqmt. No. (SSP-57000) | Verif. Method(s) | HDW #1 | HDW #2 | Due Date | Remarks/ IIT VDS # |
|---|---|---|---|---|---|---|---|---|
| 3.1.1.1.c & d | Loads Requirements | Yes (d) | 3.1.1.3 | A | | | L-8 | ST-001 & ST-002 |
| 3.1.1.2.a & b | Additional Requirements | | 3.1.1.2. B | T & A | | | L-8 | ST-003 & ME-001 |
| 3.1.1.3 | Attachment Provisions (fit check with facility) | | | T & I | | | L-20 L-9 | ME-046 |
| 3.1.2.1 | Quasi-Steady Requirements | | 3.1.2.1 | T or A | | | L-8 | EN-005 |
| 3.1.2.2 | Vibratory Requirements | | 3.1.2.2 | T or A | | | L-8 | EN-005 |
| 3.1.2.3 | Transient Requirements | | 3.1.2.3 | T or A | | | L-8 | EN-005 |
| 3.1.3 | Stowage Input Requirements (Weight, cg & Geometry) | | 3.1.3 | T & A | | | L-8 | ME-001 |
| 3.2.1.a & b | Electrical Power Characteristics (Power Draw) | | 3.2.1 | T & A | | | L-8 | EL-006 |
| 3.2.1.1 | Steady-State Voltage Characteristics | | 3.2.1.1 | T | | | L-8 | EL-001 |
| 3.2.1.2.1 | Ripple Voltage and Noise | Yes | 3.2.1.2.1 | A | | | L-10 | EL-002 |
| 3.2.1.2.2 | Ripple Voltage Spectrum | Yes | 3.2.1.2.2 | A | | | L-10 | EL-002 |
| 3.2.1.3 | Transient Voltages | | 3.2.1.3.1 | T or A | | | L-8 | EL-003 |
| 3.2.1.3.1.a & b | Fault Clearing and Protection | | 3.2.1.3.3 | A | | | L-8 | EL-004 |
| 3.2.1.3.2 | Non-Normal Voltage Range | | 3.2.1.3.4 | A | | | L-8 | EL-005 |
| 3.2.2.1.b, c, d | Primary Power Connector | | | D & I | | | L-8 | EL-007 |
| 3.2.2.2.b, c, d | Secondary Power Connector | | | D & I | | | L-8 | EL-007 |
| 3.2.2.3.a | Surge Current | | 3.2.2.4 | T & A | | | L-10 | EL-010 |
| 3.2.2.4 | Reverse Energy/Current | | 3.2.2.5 | A | | | L-10 | EL-011 |
| 3.2.2.5.a,b,c & d | Circuit Protection Devices | Yes | 3.2.2.6 | A | | | L-8 | EL-012 |
| 3.2.2.6 | Deleted | | 3.2.2.9 | | | | | |
| 3.2.2.7 | Electrical Load-Stand Alone Stability | | 3.2.210 | A | | | L-10 | EL-016 |
| 3.2.3.1 | Wire Derating | Yes | 3.2.3.1 | A | | | L-8 | EL-017 |
| 3.2.3.2 | Loss of Power | Yes | 3.2.3.3 | T (PSRP) | | | L-8 | Safety |
| 3.2.4 | Electromagnetic Compatibility | Yes | 3.2.4 | T & A | | | L-10 | EL-020 |
| 3.2.4.1.a – e thru 3.2.4.1.2.7 | Electrical Grounding/Isolation | Yes | 3.2.4.1 | T & A | | | L-10 | EL-020 & EL-021 |

Legend:
A – Analysis ( when in verification method column), A – Applicable ( when used in hardware column), D – Demonstrate, I – Inspection, N/A – Not Applicable
NVR – No verification required, PSRP – Payload Safety Review Panel, T – Test,

# Table XXXVII MSG INVESTIGATION APPLICABILITY MATRIX

| MSG IIRD Reqmt. No. | Requirement Statement | Safety | Ref. Reqmt. No. (SSP-57000) | Verif. Method(s) | HDW #1 | HDW #2 | Due Date | Remarks/ IIT VDS # |
|---|---|---|---|---|---|---|---|---|
| 3.2.4.2 thru 3.2.4.2.6.3.2 | Electrical Bonding | Yes | 3.2.4.2 | T & I & A | | | L-10 | EL-020 & EL-022 |
| 3.2.4.3.1.2.1.3 | Shield Grounding Requirements | Yes | 3.2.4.3 | T & I & A | | | L-10 | EL-021 |
| 3.2.4.3.1.2.4 | Shields | | 3.2.4.3 | A & I | | | L-10 | EL-021 |
| 3.2.4.3.1.2.4.1 | Terminations | | 3.2.4.3 | A & I | | | L-10 | EL-021 |
| 3.2.4.3.1.2.4.3 | Grounding of Radio Frequency Circuit Shields | | 3.2.4.3 | A | | | L-10 | EL-021 |
| 3.2.4.3.1.2.4.4 | Internal Equipment Shields | | 3.2.4.3 | A | | | L-10 | EL-021 |
| 3.2.4.3.1.2.4.5 | Grounding | | 3.2.4.3 | A | | | L-10 | EL-021 |
| 3.2.4.4 thru 3.2.4.4.2.6 | Electrormagnetic Emission and Susceptibility Requirements | Yes | 3.2.4.4 | T & A | | | L-10 | EL-020 |
| 3.2.4.5 | Electrostatic Discharge | Yes | 3.2.4.5 | A&I or T & I | | | L-10 | EL-024 |
| 3.2.4.6 | Alternating Current Magnetic Fields | Yes | 3.2.4.6 | T or A | | | L-10 | EL-020 |
| 3.2.4.7 | Direct Current Magnetic Fields | Yes | 3.2.4.7 | T &A | | | L-10 | EL-020 |
| 3.2.4.8 | Deleted | | | | | | | |
| 3.2.5.1 | Mating/Demating of powered connectors | Yes | 3.2.5.1.1 | I (PSRP) | | | L-8 | Safety |
| 3.2.5.2 | Safety-Critical Circuits Redundancy | Yes | 3.2.5.1.2 | A (PSRP) | | | L-8 | Safety |
| 3.2.5.3.a | Power Switches/Controls | Yes | 3.2.5.3.A | A | | | L-8 | EL-029 |
| 3.2.5.3.b | Power Switches/Controls | Yes | 3.2.5.3.B | A | | | L-8 | EL-029 |
| 3.2.5.3.c | Power Switches/Controls | Yes | 3.2.5.3.C | A | | | L-8 | EL-029 |
| 3.2.5.4.a - g | Deleted | | | | | | | |
| 3.2.5.5.a,b | Deleted | | | | | | | |
| 3.3.1.1 | Software | | | | | | | |
| 3.3.1.1.1 | Software Protocol | | | T | | | L-8 | CD-01 |
| 3.3.1.1.2 | Byte and Bit Order | | | I | | | L-8 | CD-01 |
| 3.3.1.1.3 | ESTEC Data Link Format | | | I | | | L-8 | CD-01 |

Legend:
A – Analysis ( when in verification method column), A – Applicable ( when used in hardware column), D – Demonstrate, I – Inspection, N/A – Not Applicable
NVR – No verification required, PSRP – Payload Safety Review Panel, T – Test,

# Table XXXVII MSG INVESTIGATION APPLICABILITY MATRIX

| MSG IIRD Reqmt. No. | Requirement Statement | Safety | Ref. Reqmt. No. (SSP-57000) | Verif. Method(s) | HDW #1 | HDW #2 | Due Date | Remarks/ IIT VDS # |
|---|---|---|---|---|---|---|---|---|
| 3.3.1.1.4 | Command Acknowledge & Log Messages | | | I | | | L-8 | CD-02 |
| 3.3.1.1.5 | Commanding | | | T | | | L-8 | CD-02 |
| 3.3.1.1.6 | Health and Status | Yes | | T | | | L-8 | CD-02 |
| 3.3.1.1.7 | Safety Data | Yes | | T | | | L-8 | CD-02 |
| 3.3.1.1.8 | File Transfer | | | T | | | L-8 | CD-02 |
| 3.3.1.1.9 | Illegal Commands | | | T | | | L-8 | CD-02 |
| 3.3.3.1.b | RS-422 Connector/Pin Assignments | | | D & I | | | L-8 | EL-007 |
| 3.3.3.2 | RS-422 Signal Characteristics | | | I & T | | | L-8 | CD-01 |
| 3.3.3.3 | RS-422 Cabling | | | I | | | L-8 | EL-033 |
| 3.3.4 | I/O Signal Levels & Resolution | | | T&A | | | L-8 | CD-03 |
| 3.3.4.1.b | I/O Connector/Pin Assignments | | | D & I | | | L-8 | EL-007 |
| 3.3.5.1 | Ethernet Protocol | | 33.6.1 | T | | | L-8 | CD-10 |
| 3.3.5.1.1 | Investigation Protocol on Ethernet | | 3.3.6.1.1 | T | | | L-8 | CD-10 |
| 3.3.5.1.2 | Ethernet Address | | 3.3.6.1.2 | T | | | L-12<br>L-8 | CD-11 |
| 3.3.5.1.3 | Ethernet Connectivity | | 3.3.6.1.3 | I&T | | | L-12<br>L-8 | CD-11 |
| 3.3.5.1.4 | Ethernet Connector/Pin Assignments | | 3.3.6.1.4 | I | | | L-8 | EL-007 |
| 3.3.5.1.5 | Ethernet Signal Characteristics | | 3.3.6.1.5 | I&T | | | L-12<br>L-8 | CD-12 |
| 3.3.5.1.6 | Ethernet Cable Characteristics | | 3.3.6.1.6 | I | | | L-12<br>L-8 | EL-033 |
| 3.3.5.1.6.1 | Insertion Loss | | 3.3.6.1.6.1 | T | | | L-12<br>L-8 | CD-12 |
| 3.3.5.1.6.2 | Differential Characteristic Impedance | | 3.3.6.1.6.2 | T | | | L-12<br>L-8 | CD-12 |

Legend:
A – Analysis ( when in verification method column), A – Applicable ( when used in hardware column), D – Demonstrate, I – Inspection, N/A – Not Applicable
NVR – No verification required, PSRP – Payload Safety Review Panel, T – Test,

# Table XXXVII MSG INVESTIGATION APPLICABILITY MATRIX

| MSG IIRD Reqmt. No. | Requirement Statement | Safety | Ref. Reqmt. No. (SSP-57000) | Verif. Method(s) | HDW #1 | HDW #2 | Due Date | Remarks/ IIT VDS # |
|---|---|---|---|---|---|---|---|---|
| 3.3.5.1.6.3 | Medium Time Jitter | | 3.3.6.1.6.3 | T | | | L-12<br>L-8 | CD-12 |
| 3.3.6 | MSG Laptop Computer Protocol | | | T | | | L-9<br>L-8 | CD-07 |
| 3.3.6.1.1 | RS-232C Data Port | | | I | | | L-8 | CD-07 |
| 3.3.6.1.2 | Parallel Port | | | I | | | L-8 | CD-07 |
| 3.3.7 | Video Interface Requirements | | 3.4 | T&I AorT | | | L-9<br>L-8 | CD-08 |
| 3.4.1.1 | WV Air Circulation System | | | T & A | | | L-9<br>L-8 | FD-002 |
| 3.4.1.2.1.a - f | Investigation Coldplate Mounting Requirements | | | T & I & A | | | L-9<br>L-8 | FD-003 |
| 3.5.1.1.a - e | VES Physical Interface | | 3.6.1.1 | D & T | | | L-8 | FD-014 |
| 3.5.1.2.a, b, c | VES Input Pressure Limit | Yes | 3.6.1.2 | T & A | | | L-8 | FD-015 |
| 3.5.1.3 | VES Input Temperature Limit | | 3.6.1.3 | T | | | L-8 | FD-016 |
| 3.5.1.4 | VES Input Dewpoint Limit | | 3.6.1.4 | T | | | L-8 | FD-017 |
| 3.5.1.5.a - d | VES Acceptable Exhaust Gases | Yes | 3.6.1.5 | A or A&T | | | L-20<br>L-12 | FD-018 |
| 3.5.1.5.2.a - e | VES External Contamination Control | | 3.6.1.5.2 | A | | | L-20<br>L-12 | FD-019 |
| 3.5.1.5.3 | VES Incompatible Gases | Yes | 3.6.1.5.3 | A & I | | | L-8 | FD-020 |
| 3.5.2.1.a - e | VRS Physical Interface | | | T & D | | | L-8 | FD-021 |
| 3.5.2.2.a, b, c | VRS Input Pressure Limit | Yes | 3.6.2.2 | A & T | | | L-8 | FD-022 |
| 3.5.2.3 | VRS Through-Put Limit | | 3.6.2.3 | T | | | L-8 | FD-023 |
| 3.6.1.1.a | Nitrogen Physical Interface | | 3.7.1 | I | | | L-8 | FD-027 |
| 3.6.1.1.b | Nitrogen Leakage | | 3.7.1.4 | T | | | L-8 | FD-027 |
| 3.6.1.2 | Nitrogen Flow Control | | 3.7.1.1 | T | | | L-8 | FD-024 |
| 3.6.1.3 | Nitrogen Interface MDP | Yes | 3.7.1.2 | A&T | | | L-15<br>L-12 | FD-025 |
| 3.6.1.4 | Nitrogen Interface Temperature | | 3.7.1.3 | A or T or A & T | | | L-8 | FD-026 |
| 3.6.2 | Pressurized Gas Bottles | Yes | 3.7.5 | A | | | L-8 | FD-028 |

Legend:
A – Analysis ( when in verification method column), A – Applicable ( when used in hardware column), D – Demonstrate, I – Inspection, N/A – Not Applicable
NVR – No verification required, PSRP – Payload Safety Review Panel, T – Test,

# Table XXXVII MSG INVESTIGATION APPLICABILITY MATRIX

| MSG IIRD Reqmt. No. | Requirement Statement | Safety | Ref. Reqmt. No. (SSP-57000) | Verif. Method(s) | HDW #1 | HDW #2 | Due Date | Remarks/ IIT VDS # |
|---|---|---|---|---|---|---|---|---|
| 3.7.1.1 | Pressure | Yes | 3.9.1.1 | A or T (PSRP) | | | L-8 | Closed when hazard report app. |
| 3.7.1.2 | Temperature | Yes | 3.9.1.2 | A or T (PSRP) | | | L-8 | Closed when hazard report app. |
| 3.7.1.3 | Humidity | | 3.9.1.3 | A | | | L-8 | EN-001 |
| 3.7.2.3.1.a - d | Spotlight Interface Requirements | | | D & I & T | | | L-8 | EL-037 |
| 3.7.3.a - f | WV Environment | | | A or T | | | L-8 | EN-007 |
| 3.7.4.1 | Active Air Exchange | | 3.9.2.1.A | I | | | L-8 | EN-002 |
| 3.7.4.2 | Oxygen Consumption | | 3.9.2.2 | A | | | L-8 | EN-003 |
| 3.7.4.3 | Chemical Releases | Yes | 3.9.2.3 | A & I (PSRP) | | | L-8 | Closed when hazard report app. |
| 3.7.4.4 | Cabin Air Cooling | | 3.5.1.12 | A | | | L-8 | EN-002 |
| 3.7.5.1 | Investigation Containing or Generated Ionizing Radiation | | 3.9.3.1 | A (PSRP) | | | L-8 | Closed when hazard report app. |
| 3.8 | Fire Protection Interface Requirements | Yes | 3.10.1 | A (PSRP) | | | L-8 | Closed when hazard report app. |
| 3.8.1.1.a - d | Investigation Fire Detection | Yes | 3.10.2.2.2.1 | T (PSRP) | | | L-8 | Closed when hazard report app. Or CD-02 if applicable |
| 3.8.1.2.a, b, c | Investigation Fire Suppression | Yes | 3.10.3 | A & I&D | | | L-8 | ME-055 |
| 3.9.1 | Materials and Parts Use and Selection | Yes | 3.11.1 | A & I (PSRP) | | | L-8 | Closed when hazard report app. |
| 3.9.1.1 | Commercial Parts | Yes | 3.11.1.1 | A & I (PSRP) | | | L-8 | Closed when hazard report app. |
| 3.9.1.2.a - h | Additional Material Requirements | Yes | 3.11.4 | A, I & T | | | L-20<br>L-12<br>L-8 | FD-019, MP-003 (for f), MP-004 |
| 3.9.2 | Cleanliness | | 3.11.3 | I | | | L-8 | MP-002 |
| 3.10.1.a, b, c | Strength Requirements | | 3.12.1.A | A or D | | | L-8 | ST-005 |
| 3.10.2.1.1 | Closures or Covers | | 3.12.3.1.1 | I | | | L-8 | ME-007 |
| 3.10.2.1.2.a | Built-In Control | Yes | 3.12.3.1.2.A | I | | | L-8 | ME-008 |

Legend:
A – Analysis ( when in verification method column), A – Applicable ( when used in hardware column), D – Demonstrate, I – Inspection, N/A – Not Applicable
NVR – No verification required, PSRP – Payload Safety Review Panel, T – Test,

# Table XXXVII MSG INVESTIGATION APPLICABILITY MATRIX

| MSG IIRD Reqmt. No. | Requirement Statement | Safety | Ref. Reqmt. No. (SSP-57000) | Verif. Method(s) | HDW #1 | HDW #2 | Due Date | Remarks/ IIT VDS # |
|---|---|---|---|---|---|---|---|---|
| 3.10.2.1.2.b | Built-In Control | Yes | 3.12.3.1.2.B | A or D | | | L-8 | ME-008 |
| 3.10.2.1.3 | One-handed Operation | | 3.12.3.1.5 | D | | | L-8 | ME-009 |
| 3.10.2.2.1 | Continuous/Incidental Contact-High Temperature | Yes | 3.12.3.2.1 | A (PSRP) | | | L-8 | Closed when hazard report app. |
| 3.10.2.2.2 | Continuous/Incidental Contact-Low Temperature | Yes | 3.12.3.2.2 | A (PSRP) | | | L-8 | Closed when hazard report app. |
| 3.10.2.2.3.a | Acoustic Requirements | | 3.12.3.3.1.C | T | | | L-10 | EN-006 |
| 3.10.2.2.3.b | Intermittent Noise Limits | | 3.12.3.3.2 | T | | | L-10 | EN-006 |
| 3.10.2.2.4 | Lighting Design | | 3.12.3.4. C | D | | | L-8 | ME-043 |
| 3.10.3.1 | Equipment Mounting | | 3.12.4.2.1 | A or D | | | L-8 | ME-011 |
| 3.10.3.2 | Unique Tools | | 3.12.4.2.8.4 | A | | | L-8 | ME-016 |
| 3.10.3.3 | Connectors | | 3.12.4.3 | | | | | |
| 3.10.3.3.1 | One-Handed Operation | | 3.12.4.3.1 | A or D | | | L-8 | ME-017 |
| 3.10.3.3.2 | Connector Accessibility | | 3.12.4.3.2.A, B | A or D | | | L-8 | ME-018 |
| 3.10.3.3.3 | Connector Ease of Disconnect | | 3.12.4.3.3 | A | | | L-8 | ME-017 |
| 3.10.3.3.4 | Connector Self Locking | Yes | 3.12.4.3.5 | A | | | L-8 | ME-017 |
| 3.10.3.3.5 | Connector Arrangement | | 3.12.4.3.6 A, B | I | | | L-8 | ME-018 |
| 3.10.3.3.6 | Connector Arc Containment | Yes | 3.12.4.3.7 | A | | | L-8 | EL-026 |
| 3.10.3.3.7 | Connector Protection | Yes | 3.12.4.3.8 | A | | | L-8 | ME-019 |
| 3.10.3.3.8 | Connector Shape | | 3.12.4.3.9 | A | | | L-8 | ME-019 |
| 3.10.3.3.9 | Fluid and Gas Line Connectors | Yes | 3.12.4.3.10 | A | | | L-8 | FD-001 |
| 3.10.3.3.10 | Connector Coding | | 3.12.4.3.12 A, B | I | | | L-8 | ME-020 |
| 3.10.3.3.11 | Connector Pin Identification | | 3.12.4.3.13 | I | | | L-8 | EL-007 |
| 3.10.3.3.12 | Connector Orientation | | 3.12.4.3.14 | A | | | L-8 | ME-020 |
| 3.10.3.3.13 | Alignment Marks or Guide Pins | | 3.12.4.3.11.A | I | | | L-8 | ME-020 |
| 3.10.3.4 | Fasteners | | 3.12.4.4 | | | | | |
| 3.10.3.4.1 | Non-Threaded Fasteners Status Indication | | 3.12.4.4.1 | D or I | | | L-8 | ME-023 |
| 3.10.3.4.2 | Mounting Bolt/Fastener Spacing | | 3.12.4.4.2 | I | | | L-8 | ME-024 |
| 3.10.3.4.3 | Multiple Fasteners | | 3.12.4.4.4.A | I | | | L-8 | ME-025 |

Legend:
A – Analysis ( when in verification method column), A – Applicable ( when used in hardware column), D – Demonstrate, I – Inspection, N/A – Not Applicable
NVR – No verification required, PSRP – Payload Safety Review Panel, T – Test,

# Table XXXVII MSG INVESTIGATION APPLICABILITY MATRIX

| MSG IIRD Reqmt. No. | Requirement Statement | Safety | Ref. Reqmt. No. (SSP-57000) | Verif. Method(s) | HDW #1 | HDW #2 | Due Date | Remarks/ IIT VDS # |
|---|---|---|---|---|---|---|---|---|
| 3.10.3.4.4 | Captive Fasteners | | 3.12.4.4.5 | A | | | L-8 | ME-026 |
| 3.10.3.4.5 | Quick Release Fasteners | | 3.12.4.4.6.A,B | I | | | L-8 | ME-026 |
| 3.10.3.4.6 | Threaded Fasteners | | 3.12.4.4.7 | I | | | L-8 | ME-026 |
| 3.10.3.4.7 | Over Center Latches | | 3.12.4.4.8.A, B, C | I | | | L-8 | ME-027 |
| 3.10.3.4.8 | Winghead Fasteners | | 3.12.4.4.9 | I | | | L-8 | ME-026 |
| 3.10.3.4.9 | Fastener Head Type | | 3.12.4.4.11.A, B, C | I | | | L-8 | ME-028 |
| 3.10.3.4.10 | One-Handed Actuation | | 3.12.4.4.12 | A or D | | | L-8 | ME-029 |
| 3.10.3.4.12 | Fastener Access Holes | | 3.12.4.4.14 | I | | | L-8 | ME-024 |
| 3.10.4 | Controls and Displays | | 3.12.5 | I | | | L-8 | |
| 3.10.4.1 | Controls Spacing Design Requirements | | 3.12.5.1 | I | | | L-8 | ME-030 |
| 3.10.4.2.a, b, c | Actuation Protective Methods | | 3.12.5.2.1.B, C, D | I | | | L-8 | ME-031 |
| 3.10.4.3 | Controls Noninterference | | 3.12.5.2.2 | I | | | L-8 | ME-030 |
| 3.10.4.4 | Controls Barrier Guards | | 3.12.5.2.4 | I | | | L-8 | ME-030 |
| 3.10.4.5 | Recessed Switch Protection | | 3.12.5.2.5 | I | | | L-8 | ME-031 |
| 3.10.4.6 | Controls Position Indication | | 3.12.5.2.7 | I | | | L-8 | ME-032 |
| 3.10.4.7 | Hidden Controls | | 3.12.5.2.8 | I | | | L-8 | ME-031 |
| 3.10.4.8 | Hand Controllers | | 3.12.5.2.9 | I | | | L-8 | ME-031 |
| 3.10.4.9.a - e | Valve Controls | | 3.12.5.3.A - E | I | | | L-8 | ME-033 |
| 3.10.4.10 | Toggle Switches | | 3.12.5.4 | I | | | L-8 | ME-034 |
| 3.10.5.1.a, b, c | Stowage Drawer Contents Restraints | | 3.12.6.1.A, B, C | A & I | | | L-8 | ME-036 |
| 3.10.5.2.a & b | Stowage and Equipment Drawers/Trays | | 3.12.6.2.A & B | I | | | L-8 | ME-027 |
| 3.10.5.3 | Captive Parts | | 3.12.6.3 | I | | | L-8 | ME-036 |
| 3.10.5.4 | Handles | | 3.12.6.4.1 | I & A | | | L-8 | ME-037 |
| 3.10.5.5 | Handle Location/Front Access | | 3.12.6.4.3 | I | | | L-8 | ME-037 |
| 3.10.6 | Handle Dimensions | | 3.12.6.4.4 | D or I | | | L-8 | ME-037 |

Legend:
A – Analysis ( when in verification method column), A – Applicable ( when used in hardware column), D – Demonstrate, I – Inspection, N/A – Not Applicable
NVR – No verification required, PSRP – Payload Safety Review Panel, T – Test,

# Table XXXVII MSG INVESTIGATION APPLICABILITY MATRIX

| MSG IIRD Reqmt. No. | Requirement Statement | Safety | Ref. Reqmt. No. (SSP-57000) | Verif. Method(s) | HDW #1 | HDW #2 | Due Date | Remarks/ IIT VDS # |
|---|---|---|---|---|---|---|---|---|
| 3.10.7 | Identification Labeling | | 3.12.7, 3.10.4.A & B | I | | | L-8 | ME-057 |
| 3.10.8.1.a | Crew Safety Electrical Hazards | Yes | 3.12.9.1.A | NVR | | | L-8 | EL-041 |
| 3.10.8.1.b | Crew Safety Electrical Hazards | Yes | 3.12.9.1.B | A &/or T | | | L-8 | EL-041 |
| 3.10.8.1.c | Crew Safety Electrical Hazards | Yes | 3.12.9.1.C | A &/or T | | | L-8 | EL-041 |
| 3.10.8.1.d | Crew Safety Electrical Hazards | Yes | 3.12.9.1.D | A &/or T | | | L-8 | EL-041 |
| 3.10.8.1.e | Crew Safety Electrical Hazards | Yes | 3.12.9.1.E | A &/or T | | | L-8 | EL-041 |
| 3.10.8.2 | Mismatched | Yes | 3.12.9.1.1 | I or D | | | L-8 | ME-019 |
| 3.10.8.3.1 | Device Accessibility | | 3.12.9.1.4.1 | I | | | L-8 | EL-013 |
| 3.10.8.3.2 | Extractor – Type Fuse Holder | | 3.12.9.1.4.2 | D | | | L-8 | EL-013 |
| 3.10.8.3.3 | Overload Protection Location | | 3.12.9.1.4.3 | I | | | L-8 | EL-013 |
| 3.10.8.3.4 | Overload Protection Identification | | 3.12.9.1.4.4 | I | | | L-8 | EL-013 |
| 3.10.8.3.5 | Automatic Restart Protection | | 3.12.9.1.4.5 | D | | | L-8 | EL-013 |
| 3.10.8.4 | Sharp Edges and Corners Protection | Yes | 3.12.9.2 | I (PSRP) | | | L-8 | Closed when hazard report app. |
| 3.10.8.4.1 | Holes | Yes | 3.12.9.3 | A & I | | | L-8 | ME-007 |
| 3.10.8.4.2 | Latches | Yes | 3.12.9.4 | I | | | L-8 | ME-027 |
| 3.10.8.4.3 | Screws and Bolts | Yes | 3.12.9.5 | A & I | | | L-8 | ME-026 |
| 3.10.8.4.4 | Securing Pins | Yes | 3.12.9.6 | A | | | L-8 | ME-053 |
| 3.10.8.4.5 | Levers, Cranks, Hooks, and Controls | Yes | 3.12.9.7 | A & I | | | L-8 | ME-053 |
| 3.10.8.4.6 | Burrs | Yes | 3.12.9.8 | I | | | L-8 | ME-053 |
| 3.10.8.4.7 | Lockwire | Yes | 3.12.9.9.A | A or I | | | L-8 | ST-009 |
| 3.10.9 | Payload In-Flight Maintenance | | 3.12.10 | A | | | L-8 | ME-003 |
| 3.10.10.a | Deleted | | | | | | | |
| 3.10.10.b | Deleted | | | | | | | |
| 3.10.10.c | Deleted | | | | | | | |
| 3.10.11 | Egress | Yes | 3.12.9.12 | (PSRP) | | | L-8 | Closed when hazard report app. |
| 3.11 | Safety | Yes | | (PSRP) | | | L-8 | Closed when hazard reports app. |
| C.3.5.11 | Bar Coding | | | I | | | L-8 | ME-041 |

Legend:
A – Analysis ( when in verification method column), A – Applicable ( when used in hardware column), D – Demonstrate, I – Inspection, N/A – Not Applicable
NVR – No verification required, PSRP – Payload Safety Review Panel, T – Test,

## 5.2 Schedule

The schedule for data submittal will be established on a case-by-case basis. The reports and supporting data for the requirements listed in Table XXXVII shall be submitted as they become available but no later than the date agreed upon by the Investigator and Microgravity Science Glovebox Investigation Integration Manager.

## 5.3 Reflight Verification

Investigator hardware that have previously flown on ISS increments and that are scheduled for reflight must undergo an assessment for certification. If the reflight design, operations, and environmental criteria are identical and the data provided for the original flight remain valid, then the requirements may be met by submitting a Reflight Certification as detailed below. Any changes in the design, operations, or environments will require the submission of the appropriate data as documented in Table XXXVII and as described in Section 5.4, Verification Results Reporting.

Some reflight verification requirements require an environmental assessment. The Investigator will be requested to perform the assessment and submit the data required to close the verification requirement.

Additionally, all hazard report control verifications from the previous flight must be assessed for applicability. The assessment must consider modifications or maintenance that could affect safety and limited-life items such as gaskets, seals, or batteries.

### 5.3.1 Reflight Certification

A Reflight Certification is a memorandum from an Investigator certifying that no changes have been made to the hardware components or subsystems since the previous increment(s) which affect that verification data submitted, and that the data will satisfy this verification requirement. The Investigator may submit this in table form. Section 5.5 contains an example of the format.

## 5.4 Verification Results Reporting

Results of verification activity by analysis, test, inspection and/or demonstration as required herein shall be documented. Also, data submittal shall be as specified in this document. Supporting documentation shall be retained and provided upon request. Detailed analyses and test data shall be submitted as specified herein. All verification data shall be submitted per Investigation Integration Plan, MSFC-PLAN-3052.

This Page Intentionally left Blank

# APPENDIX A
# ABBREVIATIONS/ACRONYMS

| | |
|---|---|
| A | Ampere(s) |
| AAA | Avionics Air Assembly |
| ACS | Air Circulation System |
| APC | Automatic Pressure Control |
| AC | Alternating Current |
| AHU | Air Handling Unit |
| AL | Air Lock |
| ASDA | American Smoke Detection Assembly |
| ASW | Application Software |
| AWG | American Wire Gage |
| BSW | Basic Software |
| BSP | Board Support Package |
| BWAD | Bridge Wire Activated Devise |
| C | Celsius |
| cc | Cubic Centimeter |
| CCB | Configuration Control Board |
| CCSDS | Consultative Committee for Space Data Systems |
| CE | Conducted Emissions |
| CF | Core Facility |
| Cm | Centimeter |
| CMP | Control & Monitoring Panel |
| CO | Carbon Monoxide |
| CO2 | Carbon Dioxide |
| COC | Certificate of Compliance |
| COF | Columbus Orbiting Facility |
| COTS | Commercial Off The Shelf |
| CRES | Corrosion Resistant Steel |
| CS | Conducted Susceptibility |
| CSP | Customer Support Plan |
| CUT | Cable Under Test |
| CVIT | Common Video Interface Transmitter |
| DC | Direct Current |
| DB | Decibels |
| DDCU | DC to DC Converter Unit |
| DDPF | Decal Design and Production Facility |
| DHS | Data Handling System |
| E-Box | Electronic Box |
| EGSE | Electrical Ground Support Equipment |
| EMC | Electromagnetic Compatibility |
| EMEEC | Electromagnetic Effects Control |
| EMI | Electromagnetic Interference |
| EO | Arbitrary nomenclature to Define Circuit |

| | |
|---|---|
| EPCE | Electrical Power Consuming Equipment |
| EPP | Enhanced Parallel Port |
| EPS | Electrical Power System |
| ESA | European Space Agency |
| ESD | Electrostatic Discharge |
| ESEM | Exchangeable Standard Electronic Module |
| ESTEC | European Space (Research and) Technology Center |
| EU | Engineering Unit |
| EUT | Equipment Under Test |
| EVA | Extravehicular Activity |
| F | Fahrenheit |
| FET | Field Effect Transistor |
| FO | Arbitrary nomenclature to Define Circuit |
| G | Giga |
| FU | Flight Unit |
| GFCI | Ground Fault Circuit Interrupter |
| GHz | Giga Hertz |
| GU | Ground Unit |
| HO | Arbitrary nomenclature to Define Circuit |
| Hz | Hertz |
| ICP | Internal Control Panel |
| ICD | Interface Control Document |
| ID | Identification/Data |
| IDD | Interface Definition Document |
| IEEE | Institute of Electrical and Electronic Enginners |
| IEC | International Electro Technical Commission |
| IF | Intravehicular Activity |
| IIT | Investigation Integration Team |
| IMS | Inventor Management System |
| IPLAT | ISS Payload Label Approval Team |
| IRD | Interface Requirements Document |
| ISIS | International Subrack Interface Specification |
| ISPR | International Standard Payload Rack |
| ISR | Interrupt Service Routine |
| ISS | International Space Station |
| IVA | Intravehicular Activity |
| JSC | Johnson Space Center |
| KB/S | Kilo Bits per Second |
| KSC | Kennedy Space Center |
| kg | kilo-grams |
| kHz | kelo Hertz |
| Kpa | kelo Pascal |
| LAN | Local Area Network |
| lbm | pounds mass |
| lbs | pounds |

| | |
|---|---|
| LE | Leakage Emissions |
| LISN | Line Impedance Stabilization network |
| LSE | Laboratory Support Equipment |
| mA | milli-Ampere(s) |
| MAC | Media Access Control |
| MAPTIS | Materials and Process Technical Information System |
| MB/S | Mega Bits per Second |
| MDM | Multiplexer/Demultiplexer |
| MDP | Maximum Design Pressure |
| MHz | Mega Hertz |
| min | Minute |
| mm | milli-meter |
| ML | Arbitrary nomenclature to Define Circuit |
| MLC | MSG Laptop Computer |
| MO | Arbitrary nomenclature to Define Circuit |
| MRDL | Medium Rate Data Link |
| ms | Milli Second |
| m/s | Meter per second |
| MPG | Multiple Point Grounding |
| mVpp | milli-Volts peak to peak |
| MPLM | Multi-Purpose Logistics Module |
| MSFC | Marshall Space Flight Center |
| MSG | Microgravity Science Glovebox |
| NASA | National Aeronautics and Space Administration |
| NASDA | Nation Space Development Agency Japan |
| NC | Not Connected |
| N-m | Newton meter |
| NSTS | National Space Transportation System |
| ORU | Orbital Replacement Unit |
| Pa | Pascal |
| PCS | Portable Computer System |
| PD | Payload Developer |
| PDC | Power Distribution & Conversion Box |
| PFE | Portable Fire Extinguisher |
| PMMA | Poly Methyl Meth-acrylate |
| PRCU | Payload Rack Checkout Unit |
| Psia | Pound per Square inch Atmospheric |
| Psi | Pound per Square inch |
| PSRP | Payload Safety Review Panel |
| PTR | Payload Training Representative |
| PTCS | Payload Test Checkout System |
| QD | Quick Disconnect |
| RC | Rack Controller |
| RE | Radiated Emissions |

| | |
|---|---|
| RF | Radio Frequency |
| RFI | Radio Frequency Interference |
| rms | Root Mean Square |
| RMSA | Rack Maintenance Switch Assembly |
| RPCM | Remote Power Controller Module |
| RPDA | Remote Power Distribution Assembly |
| RPSA | Remote Power Switch Assembly |
| RS | Radiated Susceptibility |
| RTN | Return |
| SAMS | Space Acceleration Measurement System |
| SD | Standard Deviation |
| scc | Standard Cubic Centimeter |
| Sec | Second |
| SEE | Single Event Effect |
| SPDA | Secondary Power Distribution Assembly |
| SPL | Sound Pressure Level |
| SPLC | Standard Payload Computer |
| SPOE | Standard Payload Outfitting Equipment |
| SPP | Standard Parallel Port |
| SSP | Space Station Program |
| SSPC | Solid State Power Controller |
| STS | Space Transportation System |
| TBC | To Be Confirmed |
| TBD | To Be Determined |
| TBR | To Be Resolved |
| TM | Technical Memo |
| TU | Training Unit |
| TWS | Twisted Shield |
| TWDS | Twisted Double Shield |
| UART | Universal Asynchronous Receiver-Transmitter |
| UIPS | Utility Interface Panels |
| *us* | Microsecond |
| USL | United States Laboratory |
| USOS | United States on-orbit Segment |
| V | Voltage |
| VC-S | Visibly Clean - Sensitive |
| VDC | Voltage Direct Current |
| VES | Vacuum Exhaust System |
| VRS | Vacuum Resource System |
| Vpp | Volts peak-to-peak |
| VTVM | Vacuum Tube Voltmeter |
| WV | Work Volume |
| Y/C | Luminance/Chrominance |

# Appendix B
# Electromagnetic Test Techniques

## B.0 Requirements

The test techniques and procedures contained in this Appendix shall be used in demonstrating compliance with emission and susceptibility requirements of Section 3.2.4.4. The test levels and test limits are defined in Section 3.2.4.4.

## B.1 General Requirements

### B.1.1 Test Conditions

#### B.1.1.1 Ambient Electromagnetic Levels

Conducted and radiated ambient levels shall be at least 6 decibels (dB) below the applicable limits of Section 3.2.4.4. Ambient conditions shall be determined prior to the beginning of measurements on the energized Equipment Under Test (EUT).

#### B.1.1.2 Ground Plane

A solid plate copper or brass ground plane shall be used. It shall have a minimum thickness of 0.25 millimeter (mm) for copper or 0.63 mm for brass and be 2.25 square meters (m) or larger in area with the smaller side no less than 76 centimeters (cm) in length. When testing is performed in a shielded enclosure, the ground plane shall be bonded to the shielded room such that the direct current (dc) bonding resistance shall not exceed 2.5 milliohms. In addition, the bonds shall be placed at distances no greater than 90–cm apart. For large equipment mounted on a metal test stand, the test stand shall be considered a part of the ground plane for testing purposes and shall be bonded accordingly.

#### B.1.1.3 Power Supply Characteristics

Power supplies for test samples requiring a power source for its operation and not supplied as part of the equipment shall have characteristics and tolerances within the limits of Section 3.2.1.

#### B.1.1.4 Radio Frequency Absorber Material

Radio Frequency (RF) absorber material may be used in shielded enclosures to reduce reflections from the surfaces of the enclosure to the measurement antennas for non–stirred mode tests only. Any use of RF absorber material shall be documented in the test report.

### B.1.1.5 Test Site

#### B.1.1.5.1 Shielded Enclosures

Shielded enclosures shall be of sufficient size to adequately accept the EUT without sacrificing test accuracy or requiring deviation from the methods specified herein. The characteristics of shielded enclosures shall be defined in the EMI Test Plan.

#### B.1.1.5.2 Open Field Sites

Open field sites may be used when sufficiently large screen rooms are not available or when the nature of the equipment tested precludes their usage. The ambient requirements of this document shall be observed to the maximum extent possible. Techniques to mitigate the effects of ambient levels that exceed the specified levels of Section 3.2.4.4 shall be detailed in the EMI Test Plan.

#### B.1.1.5.3 Test Site Atmospheric Conditions

Testing shall be performed under the following atmospheric conditions where possible:

- Temperature: 15 to 35 degrees Celsius
- Pressure: 610 to 780 mm Mercury
- Relative Humidity: 20 to 80 percent of Saturation.

### B.1.2 Measuring Equipment

This section describes the test equipment used in the test methods contained in this requirements document.

#### B.1.2.1 Test Antennas

Antennas used in performing radiated emission and susceptibility tests shall be documented. Receive antenna factors and methods used to establish radiated susceptibility environments shall be detailed in the test procedure and the EMI Test Plan. The following antenna characteristics are recommended:

| Frequency | Range | Test Antenna Characteristics |
|---|---|---|
| 14kHz–30MHz | RE02 | Electrically short high impedence electric field probe, vertically polarized. Traditionally the 41" rod with active or passive match-ing to 50 ohms. |
| 14kHz–30MHz | RS03 | The parallel plate (and numerous modifications), long wire, and E–field generator are available and listed in order of preference. The E–field generator should be reserved for the case in which the EUT is too large for other methods. |

| Frequency | Range | Test Antenna Characteristics |
|---|---|---|
| 30MHz–200MHz | RE02<br>RS03 | Dipole–like antennas. Typical antenna used in this band has been the MIL–STD–461 biconical. Care should be taken in the antenna selection to ascertain that the balun does an adequate job of match-ing the low frequency high antenna impedance of 50 ohms. |
| 200MHz–1GHz | RE02<br>RS03 | The traditional logconical and the logperiodic are available. The double ridge horn should be avoided, since the gain increases dras-tically with frequency. |
| 1GHz–10GHz | RE03 | RE02 Broadband (ridged) or standard gain horns. Logconicals are also available. |
| 10GHz– | RE02<br>RS03 | 20–dB standard gain horns. |

### B.1.2.2 Test Antenna Counterpoise (Monopole)

The following requirements shall be used when rod antennas that require a counterpoise are used. The test antenna counterpoise shall be referenced to the same ground reference used for the (EMI) meter. For measurements in shielded enclosures, the counterpoise shall be bonded to the reference ground plane. The bond strap shall be a solid metal sheet having the same width as the counterpoise, welded along the entire edge at the points of contact. Alternatively, the counterpoise shall be clamped and/or soldered to the ground plane in two places. If desired, the counterpoise may be configured so that one dimension is of adequate length to reach the equipment ground plane. For outdoor measurements, the counterpoise and interference analyzer shall be referenced to a good Earth ground.

### B.1.2.3 Use of Measuring Equipment

All laboratory equipment shall be operated as prescribed by the applicable instruction manuals unless otherwise specified herein. This requirements document shall take precedence in the event of conflict with instruction manuals or other documents issued by industry or other government agencies unless identified in an approved EMI Test Plan. For test repeatability, all test parameters used to configure the test shall be recorded in the EMI Test Plan and the EMI Test Report. These parameters shall include measurement bandwidths, video bandwidths, sweep speeds, etc.

#### B.1.2.3.1 Grounding of Measuring Equipment

To avoid false data that may be introduced by ground loops test equipment shall be referenced to the same ground as the EUT. An equipment safety ground shall be maintained at all times, but for a specific test the ground power line may be broken by means of an isolated transformer or isolation connectors. To avoid high frequency ground loops, test receivers for tests above 30 MHz shall be placed outside the test chamber.

#### B.1.2.3.2 Equipment Warm–Up Time

Prior to performing tests, the measuring equipment shall be switched on for a period of time adequate to allow parameter stabilization. If the operation manual does not specify a specific warm–up time, the minimum warm–up period shall be one hour.

#### B.1.2.3.3 Measuring Equipment Calibration

Measuring instruments and accessories used in determining compliance with this requirements document shall be calibrated under an approved program in accordance with MIL–STD–45662A, Calibration Systems Requirements.

#### B.1.2.3.4 Measurement Accuracy

Test equipment shall be capable of measuring to within the following accuracy:

- 2% for frequency
- 3 dB for amplitude.

In the event that an above–specification signal emission is found in any of the specific frequency and amplitude ranges above 100 MHz listed in Section 3.2.4.4, the frequency of the offending signal shall be determined to an accuracy of 0.002%.

#### B.1.2.3.5 Measurement Bandwidths

The measuring instrument bandwidth shall be less than one third the lowest tuned frequency in the range for narrowband and less than one half the lowest tuned frequency for optional broadband measurements. Optional broadband measurements should be made using bandwidths approximately ten times the narrowband bandwidth.

### B.1.2.4 Measurement Antenna Position

#### B.1.2.4.1 Equipment Under Test Evaluation

The following face probing technique shall be applicable only to large, rack mounted EUTs. EUTs mounted on a ground plane arranged with their interconnecting cables in accordance with the requirements of this document need not be probed. Whenever possible, each EUT shall be mounted so as to have the face with the most connectors facing the measurement antenna. Each face of the EUT shall be probed with a loop or other suitable sensor to determine the localized area producing maximum emission or susceptibility. Probing shall be performed at frequencies known or calculated to represent worst case interference; if no such information is available, probing shall be performed at no fewer points than one frequency for every two octaves over the frequency range of test. The face exhibiting worst case characteristics in any octave or band, provided that band is not less than two octaves, shall face the test antenna for that portion of the frequency scan. Automatic scan techniques may be used to scan all sides.

#### B.1.2.4.2 Location

When performing radiated emission and susceptibility tests, no points of the antennas shall be less than 30 cm from the floor and ceiling and 1 m from the walls of the shielded enclosure or obstruction.

#### B.1.2.4.3 Linearly Polarized Antennas

For radiated emission measurements above 30 megahertz (MHz), linearly polarized antennas shall be positioned to measure the vertical and horizontal components of the emission. For radiated susceptibility measurements above 30 MHz, linearly polarized test antennas shall be positioned so as to generate vertical and horizontal fields.

### B.1.3 Pulsed Continuous Wave Requirements

The following guidelines govern the requirements for pulsed continuous wave interference:

- Narrowband limits shall be used
- Bandwidth correction factors shall not be used.

### B.1.4 Arrangement and Operation of Equipment Under Test

#### B.1.4.1 Control Adjustment

For a representative set of modes of operation, controls on the EUT shall be operated and adjusted as prescribed in the instruction manual or as required by the equipment specification to obtain optimum performance. For susceptibility tests, the most susceptible modes shall be selected. For emission tests, the most noisy modes shall be selected.

#### B.1.4.2 Signal Inputs

Actual or simulated signal inputs and software required to activate, utilize, or operate a representative set of circuits shall be used during emission and susceptibility testing.

#### B.1.4.3 Equipment Under Test Arrangement

Interconnecting cable assemblies and supporting structures shall simulate actual installation and usage. Shielded leads used in the test setup shall be the same as specified in approved installation drawings. Diagrams of the cables which interconnect the EUTs shall be documented. Cables and equipment shall not be interposed between the EUT cables and the measurement antennas. When testing within a shielded enclosure, one face of the box comprising the EUT shall be located within 10 cm from the ground plane edge nearest the measurement antenna. All leads and cables shall be located within 10 cm from

the ground plane edge nearest the measurement antenna and shall be supported at least 5 cm above the ground plane on non–conductive spacers. Power cable configuration shall simulate actual installation with minimum breakout for use with current probes near feed through capacitors.

### B.1.4.4 Bonding and Grounding of Equipment Under Test

Bonding of the EUT for tests shall be in accordance with the approved installation drawings for the equipment. When bonding straps are required to complete the test setup, they shall be the same as those specified in the installation drawings. Portable equipment shall be grounded by the third wire of the power cable. Physical isolation of the portable equipment chassis from structure shall be required for testing. Bonding provisions used for all testing shall be documented in the EMI Test Report.

#### B.1.4.4.1 Shock and Vibration Isolators

If the EUT is mounted on a base with shock or vibration isolators in the operational installation, the test setup shall include such mounting provisions. Bonding hardware and application for the EUT shall be identical to the approved installation drawing. If no provisions for bond straps are made on the installation drawings, then no bond straps shall be used during testing.

#### B.1.4.4.2 External Ground Terminal

When an external terminal is provided for a ground connection on the EUT, this terminal shall be connected to the ground plane. The conductor used for the connection shall be of similar dimensions and material to that shown on installation drawings, i.e., length, width, thickness, and diameter.

### B.1.4.5 Loads

The EUT shall be loaded with the full mechanical and electrical load or equivalent for which it is designed. If worst case EMI conditions exist at a reduced load, the tests shall include the reduced level loads as well as the full load. This requirement specifically includes electrical loading of the contacts of mechanisms which are designed to control electrical loads even though such loads are physically separate from the EUT. Operation of voltage regulators and other circuits that function intermittently shall be required during testing. The loads used shall simulate the impedance of the actual load. Mechanical devices shall also be operated under load. The EUT shall be actuated by the same means as in the installation. As an example, if a solenoid is actuated by a silicon controlled rectifier, a toggle switch shall not be used to operate the solenoid for the test.

### B.1.4.6 Source and Loads for Communications–Electronics Equipment

All RF outputs of communications electronics equipment shall be terminated with shielded dummy loads as appropriate for the EUT and the test being performed, to

produce maximum normal output. At the frequencies of concern, the Voltage Standing Wave Ratio of resistive dummy loads, attenuators, directional couplers, samplers, power dividers, and the internal output impedance of standard signal generators shall be no greater than:

- Transmitter loads; 1.5:1
- All other dummy loads and pads; 1.3:1
- Standard signal generators; 1.3:1.

The use of standard signal generators shall be defined in the equipment list of the test procedure.

## B.2 Specific Test Procedures and Techniques

### B.2.1 Conducted emissions

#### B.2.1.1 CE01, conducted emissions

Direct current primary power (120V), low frequency, 30 hertz (Hz) to15 kilohertz (kHz). Direct current secondary power (28V, ±12V, 5V) frequency, 30 Hz to 50 MHz.

##### B.2.1.1.1 Applicability

The test method for CE01 shall be applicable for measuring narrowband conducted emissions in the frequency range between 30 Hz and 15 kHz on the 120V primary and 30 Hz to 50 MHz on the secondary on the following types of leads:

- dc leads which obtain power from, or provide power to other equipment, distribution panelsor subsystems.

##### B.2.1.1.2 Test Equipment

The test equipment shall include the following:

- Current probe
- Electromagnetic interference analyzer with a narrowband capability
- 10–microfarad feed–through capacitors.

##### B.2.1.1.3 Test Setup

The test setup shall be as shown in Figure 35.

##### B.2.1.1.4 Test Procedure

Measurements shall be taken with the interference analyzer bandwidth as specified in this document.

#### B.2.1.1.5 Data

Emissions greater than 20 dB below the specified limits shall be logged and reported in the test report. In cases where the noise floor and ambient are not 20 dB below specified level, only those emissions above the noise floor/ambient are required to be recorded.

### B.2.1.2 CE03, Conducted Emissions

Direct current primary power (120V) leads, 15 kHz to 50 megahertz (MHz).
Direct current secondary power (28V, ±12V, 5V) frequency, 30 Hz to 50 MHz.

#### B.2.1.2.1 Applicability

The test method for CE03 shall be applicable for measuring narrowband conducted emissions in the frequency range between 15 kHz and 50 MHz on the120V primary and 30 Hz to 50 MHz for the secondary on the following types of leads:

- dc leads which obtain power from other sources or provide power to other equipment, distribution panels or subsystems. Interconnecting leads and cables between equipment that form a subsystem from the same supplier are exempt if the units are tested together.

#### B.2.1.2.2 Test Equipment

The test equipment shall include the following:

- Current probe
- Matching transformer, if required between current probe and the interference meter to allow the measuring system to meet the sensitivity requirements needed to perform the test
- Interference analyzer
- Isolation transformer for interference analyzer as required.

#### B.2.1.2.3 Test Setup

The test setup shall be as shown in Figure 35.

#### B.2.1.2.4 Test Procedure

Measurements shall be taken with the interference analyzer bandwidth as specified in this document.

#### B.2.1.2.5 Data

Emissions greater than 20 dB below the specified limits shall be logged and reported in the test report. In cases where the noise floor and ambient are not 20 dB below specified level, only those emissions above the noise floor/ambient are required to be recorded.

#### B.2.1.2.6 CE03 Notes

The EUT and EMI instrumentation shall derive their power requirements from separate phases of the ac power source, if possible. The purpose of this requirement is to provide isolation between the EUT and measurement instrumentation through the enclosure power line filters.

CAUTION: The instrumentation shall be properly grounded before applying ac power to prevent potential shock hazard to personnel.

### B.2.1.3 CE07, Conducted Emissions

Direct current power leads, spikes, time domain.

#### B.2.1.3.1 Applicability

The purpose of this test method is to measure in the time domain, the load induced effect on dc power quality caused by cycling the EUT power and operating modes. This method is applicable for measuring time domain spikes occurring when loads are energized in a discrete manner from secondary power (example: remote power controller). Measurement shall be made line–to–line. The requirement for turn–off transients is applicable only when the power switch is contained within the EUT (as opposed to a remotely located power switch or circuit breaker). Investigations using the MSG secondary power only are not required to perform this test.

#### B.2.1.3.2 Test Equipment

The test equipment shall include the following:

- Line Impedance Stabilization Network (LISN) as shown in Figure 36
- Oscilloscope
- Switch
- Recording Device
- Triggering Device

#### B.2.1.3.3 Test Setup

The setup shall be as shown in Figure 37. The ac measurement shall be made line–to–line, with oscilloscope probes connected between each line to be measured and each of

the two channels of the oscilloscope, with the second channel inverted and added to the first channel. The probes shall be attached to the energized line impedance stabilization network, with the switch to the EUT open. The measurement is made when the switch is closed. Prior to making a line to line measurement as described above, it is necessary to match the gain of the two oscilloscope channels within some tolerance. The tolerance required is what is necessary to reduce common mode "residues" to a level that will not affect test results.

#### B.2.1.3.4 Test Procedure

With the test setup of Figure 37, cycle the power to the EUT on/off and exercise all the appropriate internal EUT mode switches. Record the voltage transients. Compare against the appropriate transient specification.

#### B.2.1.3.5 CE07 Notes

A LISN shall be inserted in each pair of lines tested. See Figure 36. The series resistance shall be based on the final installation dc resistance of the Space Station Power Distribution System (PDS) between the DC–to–DC Converter Unit (DDCU) and the start of the dedicated feeders to the installed EUT. The oscilloscope shall provide a minimum single event bandwidth of 20 MHz, effective resolution of 8 bits (for a digital oscilloscope). The oscilloscope shall have a two channel capability, with the ADD and INVERT modes available, again with a 20–MHz single event bandwidth. If the EUT is cycled on/off by a controlled remote switch or breaker, then this function shall be provided for in the test setup. A mercury (Hg) relay switch or equivalent which is not a source of significant transient effects shall be used. The triggering device is critical to a successful test. Triggering shall be provided such that, as a minimum, 90% of the leading edge of the transient waveform can be viewed.

### B.2.2 Conducted Susceptibility

#### B.2.2.1 CS01, conducted susceptibility

Direct current power leads, 30 Hz to 50 kHz.

#### B.2.2.1.1 Applicability

The test method for CS01 shall be applicable for determining susceptibility of equipment and subsystems to electrical energy appearing on dc power leads.

#### B.2.2.1.2 Test Equipment

The equipment shall consist of the following:

- Signal generator capable of providing the required test frequencies

- Audio power amplifier of 50 watts (W) or greater with output impedance less than or equal to 2.0 ohms and capable of delivering 50 W into a 0.5–ohm resistive load connected across the isolation transformer secondary
- Oscilloscope, voltmeter
- Isolation transformer
- A 100–microfarad capacitor may be required as a shunt to dc power source impedance if
- difficulty is encountered in obtaining the required test voltage.

#### B.2.2.1.3 Test Setup

The test setup shall be as shown in Figure 38. Appropriate monitoring devices shall be connected to EUT outputs.

Caution: Since the transformer secondary winding may provide substantial inductance, the test setup and EUT should be evaluated for potential damage from back-EMF should the power supply output suddenly open or short. A snubber circuit, clamping diodes, the suggested power supply bypass capacitor, or other methods may be used to protect the EUT, power supply, transformer, and test equipment from over-stress from a back-EMF pulse. This protect should especially be considered for testing of Protoflight and Flight hardware.

#### B.2.2.1.4 Test Procedure

The signal generator shall be tuned through the required frequency range with the power amplifier output adjusted to the level specified in Section 3.2.4.4. The equipment shall be monitored for:

- Malfunction
- Degradation of performance
- Deviation of parameters beyond tolerances indicated in the equipment specification.

##### B.2.2.1.4.1 Susceptibility

When an EUT susceptibility is noted, the output level shall be decreased to determine the susceptibility threshold level. This value shall be recorded. The requirement is also met when the audio power source, adjusted to dissipate 50 W in a 0.5–ohm load, can not develop the required voltage at the EUT power input terminals, and the EUT is not susceptible to the output of the signal source.

##### B.2.2.1.4.2 Supply Voltage

The required nominal supply voltage applied to the EUT shall be measured and maintained within specified tolerances during the test.

#### B.2.2.2 CS02, Conducted Susceptibility

Direct current power leads, 50 kHz to 50 MHz.

##### B.2.2.2.1 Applicability

The test method for CS02 shall be applicable for determining susceptibility of equipment and subsystems to electrical energy appearing on dc power leads including power returns and which are not grounded internally to the equipment or subsystem.

##### B.2.2.2.2 Test Equipment

The test equipment shall consist of the following:

- Signal Source: a 50–ohm output impedance source capable of generating 1 volt (V) rms. and/or 1 W output, minimum, into a 50–ohm load
- LISN as specified in Figure 36, Note: Lead not being tested should bypass LISN.
- Voltmeter, oscilloscope, or interference analyzer
- Coupling capacitor: The capacitor shall be used to isolate the power line frequencies from the signal source and shall have an RF impedance of 5 ohms or less, over the frequency range of the test. The capacitor may be changed during the test to maintain the impedance.

##### B.2.2.2.3 Test Setup

The general test setup shall be as shown in Figure 39.

##### B.2.2.2.4 Test Procedure

- The coupling capacitor and voltmeter, oscilloscope, or interference analyzer shall be connected within 5 cm of the termination to the EUT
- The test signal shall be applied to each power lead
- When testing equipment using single point grounds (dc power input leads isolated within the EUT), the test signal shall be applied between each power lead or ground return lead and the ground plane
- The voltage across the injection terminal to ground of the EUT shall be measured and recorded
- If the EUT is susceptible to the applicable limit level, then the signal source output shall be decreased to determine and record the threshold of susceptibility.

#### B.2.2.3 CS06, Conducted Susceptibility

Spikes, power leads.

##### B.2.2.3.1 Purpose

The test method for CS06 shall be used to determine equipment susceptibility to spike

interference on power leads, including grounds and returns which are not grounded internally to the equipment or subsystem.

#### B.2.2.3.2 Applicability

CS06 shall be applicable to equipment and subsystem power leads, including grounds which are not grounded internally to the equipment or subsystem.

#### B.2.2.3.3 TEST EQUIPMENT

The test equipment shall consist of the following:

- Spike Generator
- Capacitor as required
- Oscilloscope.

#### B.2.2.3.4 Test Setup

The test setup shall be as shown in Figure 40 or Figure 41.

Caution: Since the transformer secondary winding may provide substantial inductance, the test setup and EUT should be evaluated for potential damage from back-EMF should the power supply output suddenly open or short. A snubber circuit, clamping diodes, the suggested power supply bypass capacitor, or other methods may be used to protect the EUT, power supply, transformer, and test equipment from over-stress from a back-EMF pulse. This protect should especially be considered for testing of Protoflight and Flight hardware.

#### B.2.2.3.5 Test Procedure

Test procedures for testing equipment with dc leads shall be as follows:

- The EUT and test instrumentation shall be connected as shown in Figure 40 or Figure 41.
- Either a series or shunt test method may be used.
- The applied spike amplitude, rise time, and duration, as measured by the oscilloscope across the input terminals of the EUT, shall follow the typical wave shape and amplitude as specified in Section 3.2.4.4. The applied spike shall be developed across a non–inductive 5–ohm resistor and then applied to the EUT.
- Repetitive (6 to 10 pulses per second) spikes, both positive and negative, shall be applied to the EUT ungrounded input lines for a period not less than 2 minutes in duration. On equipment employing gated circuitry, the spike shall be triggered to occur within the time frame of the gate.
- If susceptibility occurs, then its threshold level, repetition rate, and time of occurrence on circuit gates shall be determined and recorded.

#### B.2.2.3.6 CS06 Notes

The spike generator shall have the following characteristics:

- Pulse width of 10 and 0.15 microsecond
- Pulse repetition rate of 3 to 10 pulses per second
- Voltage output as required by Section 3.2.4.4
- Output control
- Adequate transformer current capacity commensurate with line being tested
- External synchronization capability
- External trigger capability
- Capacitor may be used to protect dc power source. Any oscilloscope with 10–MHz
- bandwidth or greater and sweep rates greater than 10 times the pulse rate shall be acceptable.
- Output impedance 2 ohms or less for 0.15–microsecond transient and 1 ohm for
- 10–microsecond transient.

### B.2.3 Radiated Emissions

#### B.2.3.1 RE02, radiated emission

Electric field, 14 kHz to 20 GHz.

#### B.2.3.1.1 Applicability

The test method for RE02 shall be applicable for the measurement of radiated emissions from all equipment and subsystems, cables (including control, pulse, IF, power and antenna transmission lines), and interconnecting wiring of the equipment and subsystem; for narrowband emissions, it applies at the fundamental frequencies and all spurious emissions including harmonics, but does not apply for radiation from antennas.

#### B.2.3.1.2 Test Frequency Range

The test frequency range shall be 14 kHz to 20 GHz.

#### B.2.3.1.3 Test Equipment

The test equipment shall be as follows:

- Test antennas
- Interference analyzer (set in peak node).

#### B.2.3.1.4 Test Setup

The basic test setups shall be as shown in Figures 42 and 43. EUT antenna terminals, if any, shall be connected to shielded dummy loads.

##### B.2.3.1.4.1 Non–Portable Equipment

Non–portable equipment is permanently connected either physically or electrically to a vehicle, system, or installation. It shall be tested in accordance with the setup shown in Figure 42.

##### B.2.3.1.4.2 Portable Equipment

Portable equipment, including manpack operable equipment and test equipment, shall be tested in accordance with the setup shown in Figure 43.

##### B.2.3.1.4.3 Equipment Classified Both Portable and Non–Portable

Equipment falling into both the non–portable and portable categories shall be tested both ways.

#### B.2.3.1.5 Test Procedure

##### B.2.3.1.5.1 Locate Maximum Radiation

The EUT shall be probed as indicated in paragraph B.1.2.4.1 to locate the points of maximumradiation from the EUT.

##### B.2.3.1.5.2 Antennas

The test antennas shall be selected and positioned as stated in paragraph B.1.2.4 at a test distance of 1 m. In the frequency range of 30 MHz to 20 GHz, linearly polarized antennas shall be positioned so as to make both vertical and horizontal measurements. If a rod antenna with a counterpoise is used, then the counterpoise of a 41–inch rod antenna shall be bonded in accordance with the requirements of this document.

##### B.2.3.1.5.3 RE02 Notes

RE02 shall be measured in peak detector mode.

### B.2.4 Radiated Susceptibility

#### B.2.4.1 RS02, Radiated Susceptibility

Magnetic induction field.

#### B.2.4.1.1 Applicability

The test method for RS02 shall be applicable for the determination of the susceptibility of cable connected equipment to short duration, fast risetime induction fields electromagnetically coupled into the equipment through the wiring connecting equipment.

#### B.2.4.1.2 Test Equipment

The test equipment shall consist of the following:

- Spike generators as specified in Method CS06 of this document
- A dual channel oscilloscope having a 10–MHz bandwidth.

#### B.2.4.1.3 Test Setup

The test setup shall be as indicated in Figure 44. The cable under test (CUT) shall be stressed by taping an insulated AWG#12 (or larger) size wire (coupling wire) to each CUT in the test setup, parallel to the CUT, running the entire length of the bundle to 15 cm from each end connector. The portions of the test wire not taped to the CUT shall be well removed from the CUT in order to couple the maximum flux into the CUT. In some cases where it is known that the Space Station installed cable will be significantly longer than the CUT, it may be desired to simulate stressing of the installed length by multiple parallel wraps of the test wire such that the meter turns product of the test wire taped to the CUT is numerically equal to the length (in meters) of the installed cable. In such cases, it is important that the portions of the test wire not adjacent to the CUT be not only removed from the vicinity of the CUT, but also that each layer of the wrap be removed from adjacent layers to limit inductance which can cause an inability to provide sufficient current to perform the test. For the same reason, it is important to have a controlled test wire configuration so that the calibrated current is unchanged for the duration of the test.

#### B.2.4.1.4 Test Procedure

##### B.2.4.1.4.1 Spikes

Two spike signals, both positive and negative, shall be impressed at a rate of 400 Hz or at the maximum rate at which the waveforms and amplitudes specified in Section 3.2.4.4 can be achieved. The waveforms and amplitudes of the spike signals shall be measured across a non–inductive 10–ohm resistor. The measurement device shall be an oscilloscope, configured to read differentially across the resistor. That is, two probes shall be used to connect at the resistor terminals, and one channel's input shall be subtracted from the other (oscilloscope in ADD and INVERT modes).

##### B.2.4.1.4.2 Equipment Under Test Performance

The EUT shall be monitored for susceptibility. The monitoring period shall be sufficient to check all modes of the EUT for susceptibility. The susceptibility criteria as well as the

appropriate monitoring period shall be defined in the approved test plan. Thresholds of susceptibility shall be determined and recorded where susceptibility is noted. Because the interference signals coupled into the CUT are functions of both currents in the test wire and the separation of the test wire from the CUT, the threshold of susceptibility shall be specified two ways. First, the spike amplitude shall be diminished until the threshold is reached. That spike amplitude shall be recorded. Secondly, the amplitude and waveform specified in Section 3.2.4.4 shall be re–established, and the test wire shall be removed a small distance from the CUT. The test shall be rerun to determine the threshold of susceptibility for the separation of test wire and CUT. If the CUT is comprised of many bundle classes, the most sensitive bundle class in the CUT shall be used to determine the separation.

#### B.2.4.1.5 RS02 Notes

Power input and output leads are exempt from this test. It is not intended that individual wires be tested but rather that wire bundles configured per Space Station installation drawings be tested. CUTs which have a diameter greater than 1 cm shall have the test wire sequentially placed at different locations around the periphery of the CUT in order to assure that all wires are adequately stressed. Alternately, to more quickly complete the test, an extra wire may be laid up parallel to the CUT, on the opposite side of the CUT from the first wire, for CUTs of greater than 1–cm diameter. Each such extra wire shall have currents driven into it at separate times. Current carrying wires shall be kept 15 cm away from cable connectors. All cables shall be at least 5 cm above the ground.

### B.2.4.2 RS03, Radiated Susceptibility

Electric Field, 14 kHz to 20 GHz.

#### B.2.4.2.1 Applicability

The test method for RS03 shall be used to determine equipment and subsystem susceptibility in the presence of an electric field.

#### B.2.4.2.2 Test Equipment

The test equipment shall consist of the following:

- A signal source capable of generating electric fields and frequencies specified in Section 3.2.4.4
- An interference analyzer to measure test field strengths
- Antennas as specified in paragraph B.1.2.1
- An output monitor to monitor performance of the EUT.

#### B.2.4.2.3 Test Setup and Procedures

##### B.2.4.2.3.1 Placement of Antennas

The test setup shall be as required by the general testing requirements of this document for placement of antennas.

##### B.2.4.2.3.2 Test Signals

Test signals shall consist of two categories. These categories are based on standard test frequencies and frequencies at amplitudes that are defined by the Space Station design.

##### B.2.4.2.3.3 Test Signal Levels

The test signal levels shall be as specified in Section 3.2.4.4. The test signal shall be established at the mounting location of the EUT. The field strengths shall be verified as required. Standard test frequencies shall consist of a frequency sweep from 14 kHz to 200 MHz at 5 V/m, 200 MHz to 8 GHz at 60 V/m and 8GHz to 10 GHz at 20 V/m. The Station defined frequencies are 2.2 GHz at 161 V/m, 8.5 GHz at 79 V/m and 14.8 – 15.2 GHz at 250 V/m.

##### B.2.4.2.3.4 Signal Modulation

Signal modulation for Station derived frequencies shall be defined by the tier 1 contractor and both the type of modulation and percentage of modulation, if applicable, shall be documented. The tier 1 contractor shall also define the signal modulation characteristics for the standard test frequencies. The minimum criteria for the signal modulation of the standard test frequencies shall be as defined in this document.

##### B.2.4.2.3.5 Antenna Selection

Fields shall be generated, as required, with signal sources and antenna that provide the required field strength. Longwire antennas or parallel strip line antennas may be used if they are applicable and desired.

##### B.2.4.2.3.6 Field Strength Calibration

The specified field strength shall be established prior to the actual testing by placing a field measuring antenna at the same distance and in the same relative location as the EUT and by adjusting the signal level applied to the transmitting antenna until the required field intensity is indicated. The voltage or power at the input terminals of the transmitting antenna required to establish the specified field shall be monitored and recorded. When performing this calibration in a shielded enclosure, the measurement antenna shall be placed in either the exact location that the EUT will occupy or shall be in a position which simulates exactly the geometry of the EUT location with respect to distances to reflective surfaces. This calibration may be used for all subsequent testing provided that

either the data were taken in a reflective free area or the same shielded enclosure EUT location was used.

#### B.2.4.2.3.7 Large Equipment Under Test

When a large EUT will be immersed in a field, the transmitting antenna shall be placed at a distance sufficient to allow the entire EUT to fall within the 3–dB beamwidth of the transmitted field. If this is not feasible because of either difficulty in generating the required field at the greater distance or the nature of the antenna radiation characteristics, then the EUT may be tested in segments where each segment is equal in dimension to the 6–dB beamwidth of the antenna radiation characteristic. For a whip transmitting antenna, the horizontal segments shall have length no greater than those given by the following equation: $L = 2\,[R\,d - (d/2)^2]^{1/2}$, where R is the test distance and d is the EUT width measured along a line forming a right angle with the face of the EUT which is directed toward the transmitting antenna.

#### B.2.4.2.3.8 Susceptibility Determination

The signal generators shall be tuned through the required frequency ranges with the power output adjusted to provide the fields specified in Section 3.2.4.4. The equipment shall be monitored for evidences of susceptibility:

- Malfunction
- Degradation of performance
- Deviation of parameters beyond tolerances indicated in the EUT specification at frequencies where susceptibility is encountered, the threshold of susceptibility shall be determined. All pertinent data shall be recorded.

#### B.2.4.2.3.9 Minimum Criteria for Signal Modulation

Test signals shall be modulated according to the following minimum criteria for testing performed using the standard test frequencies.

##### B.2.4.2.3.9.1 Equipment Under Test With Audio Channels/Receivers

- Amplitude modulation (AM) Receivers: Modulate 50 percent with 1000–Hz sinewave.
- Frequency modulation (FM) Receivers: When monitoring signal to noise ratio, modulate with 1000–Hz sinewave using 10–kHz deviation. When monitoring receiver quieting, use no modulation.
- Single Side Band Receivers: Use no modulation.
- Other Equipment: Same as for AM receivers.

##### B.2.4.2.3.9.2 Equipment Under Test With Video Channels Other Than Receivers

Modulate 90 to 100 percenT with pulse of duration 2 per bandwidth and repetition rate equal to bandwidth/1000 where bandwidth is the video bandwidth.

#### B.2.4.2.3.9.3 Digital Equipment

Use pulse modulation with pulse duration and repetition rates equal to that used in the equipment.

#### B.2.4.2.3.9.4 Non–Tuned Equipment

Amplitude modulate 50 percent with 1000–Hz sinewave.

### B.2.5 Leakage Emissions

### B.2.5.1 LE01, Leakage Emissions, Power User Leakage Current

#### B.2.5.1.1 Applicability

The test method for LE01 shall only be applicable to equipment and subsystems that use ac power.

#### B.2.5.1.2 Test Equipment

The test equipment shall be as follows:

- ac power source
- A current meter capable of measuring 10 percent, minimum, of the test limit current at the frequency of the power source
- An insulator/isolator of dimensions sufficient to limit the capacitance between the chassis and the ground plane to 10 picofarads maximum and the resistance between the chassis and the ground plane to $10^6$ ohms dc, minimum.

#### B.2.5.1.3 Test setup

The test setup shall be as shown in Figure 45 or equivalent.

#### B.2.5.1.4 Test Procedure

The EUT shall be electrically energized and operated as specified in its operating manual. While the EUT is operating, the leakage current at the power frequency shall be measured and recorded. The EUT shall be tested for each mode of operation.

#### B.2.5.1.5 Leakage Current Limit

The power frequency leakage current shall not exceed the value specified in Section 3.2.4.4.

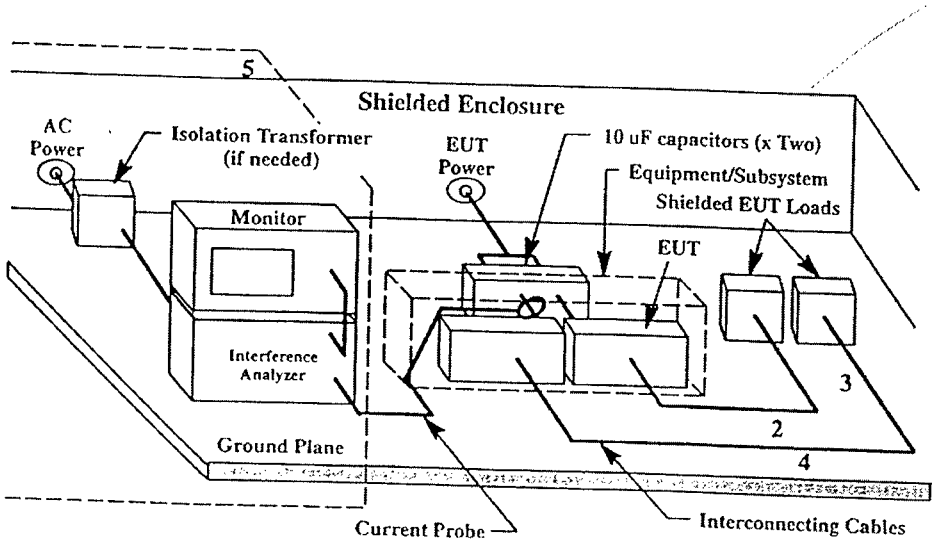


Notes:

1. Shielded enclosure is bonded to ground plane every 90 cm or less.
2. Cable bundles are separated by at least 5 cm.
3. Cables are placed at least 5 cm above ground plane.
4. Cables and leads are placed within 10 cm of edge of ground plane.
5. May be located in a different room.

**Figure 35. <u>Typical Test Setup for Measuring Conducted Emissions on DC Power Lines or Interconnecting Leads (CE01 and CE03)</u>**

L = 10 µH
$R_p$ = 25 ohms
$R_s$ = 0.05 ohms
C = 5000 µF for energy storage. May be more or less, purpose is to provide stiff voltage at LISN input.

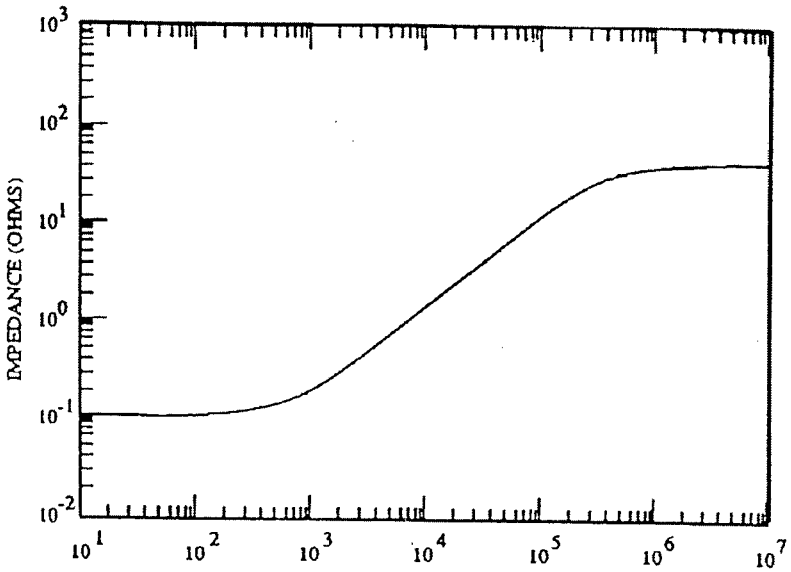


FREQUENCY (HZ)
LISN Impedance vs Frequency

Schematic:

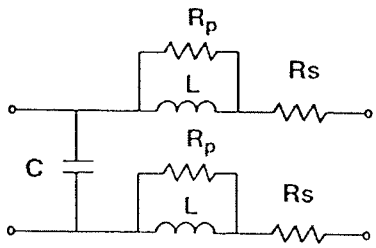


**Figure 36. <u>LISN for CE07 Measurement</u>**

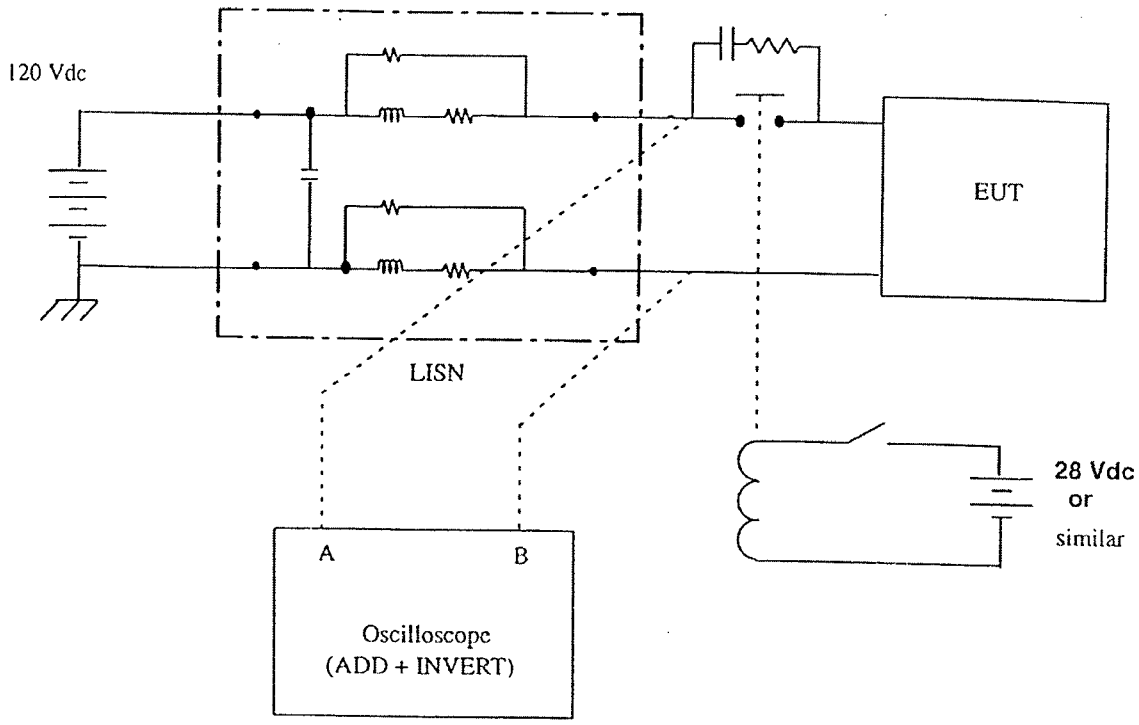


NOTE: Hg switch or relay should be filtered to reduce effects of arcing. Capacitor reduces arcing on turn–off, resistor reduces effect on turn–on (due to capacitor).

Note: Change parallel resistor in LISN to be in parallel with inductor only.
Swap words "add" and "invert".
Put capacitors in the oscilloscope lines.

**Figure 37. <u>CE07 Test Setup</u>**

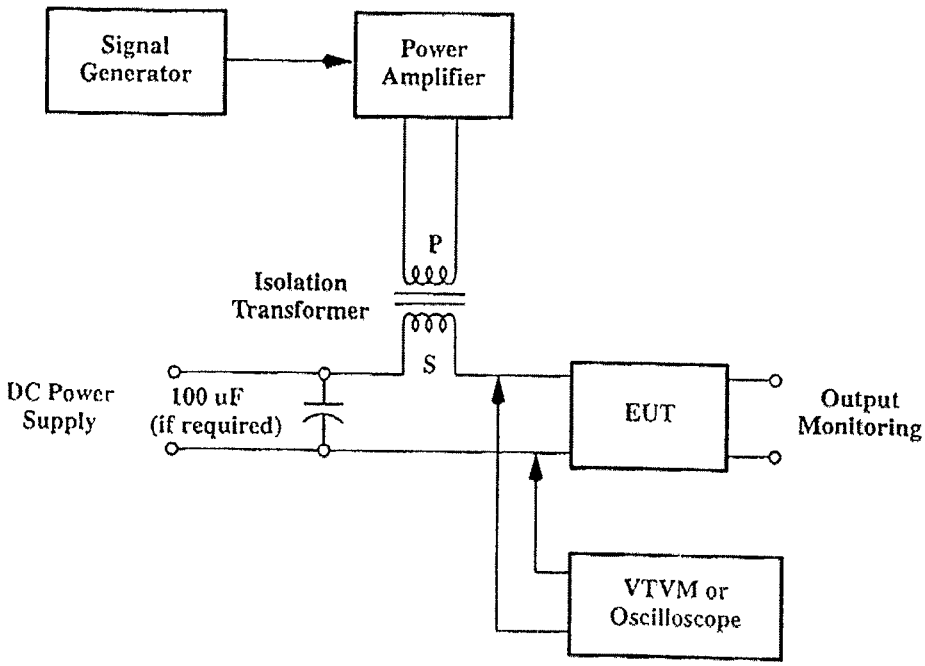


Note: Put capacitors in the oscilloscope lines as necessary to prevent over-stressing oscilloscope.

**Figure 38.** **Conducted Susceptibility, 30 Hz to 50 kHz Typical Test Setup (CS01)**

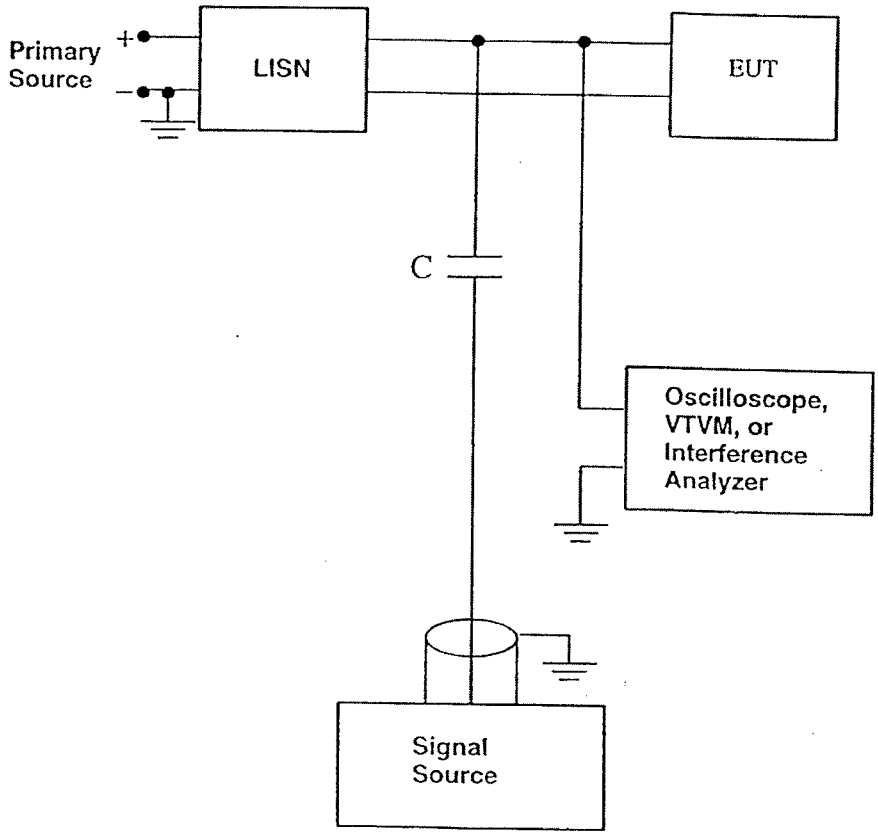


1. The value of C shall be chosen such that Xc<5 ohms over the test frequencies
2. Connect the coupling capacitor and the VTVM, Oscilloscope, or Interference Analyzer, within 5 cm of the termination to the EUT

Note: Power lead not being tested should bypass LISN

**Figure 39. <u>Conducted Susceptibility, 50 kHz to 50 MHzTypical Test Setup (CS02)</u>**

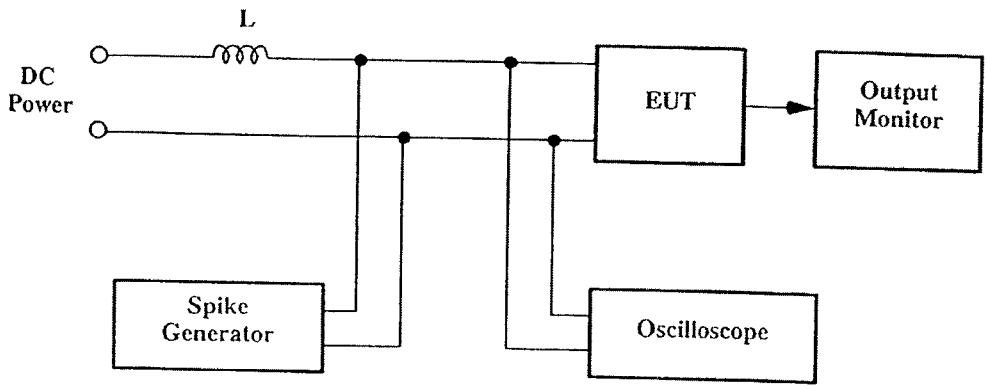


Note: L = 20 microhenries (optional)

Note: Put capacitors in the oscilloscope lines as necessary to prevent over-stressing oscilloscope.

**Figure 40. Conducted Susceptibility, Spike Parallel Injection Test Setup (CS06)**

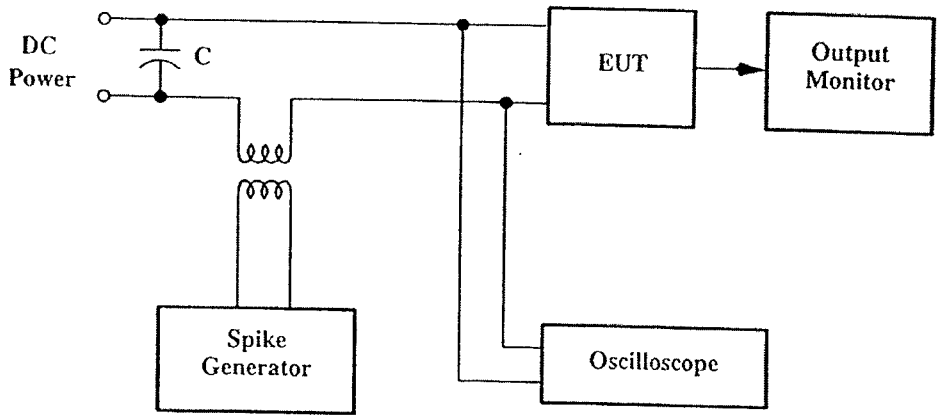


Note: Capacitor may be used to protect the DC power supply.

**Figure 41. Conducted Susceptibility, Spike Series Injection Test Setup (CS06)**

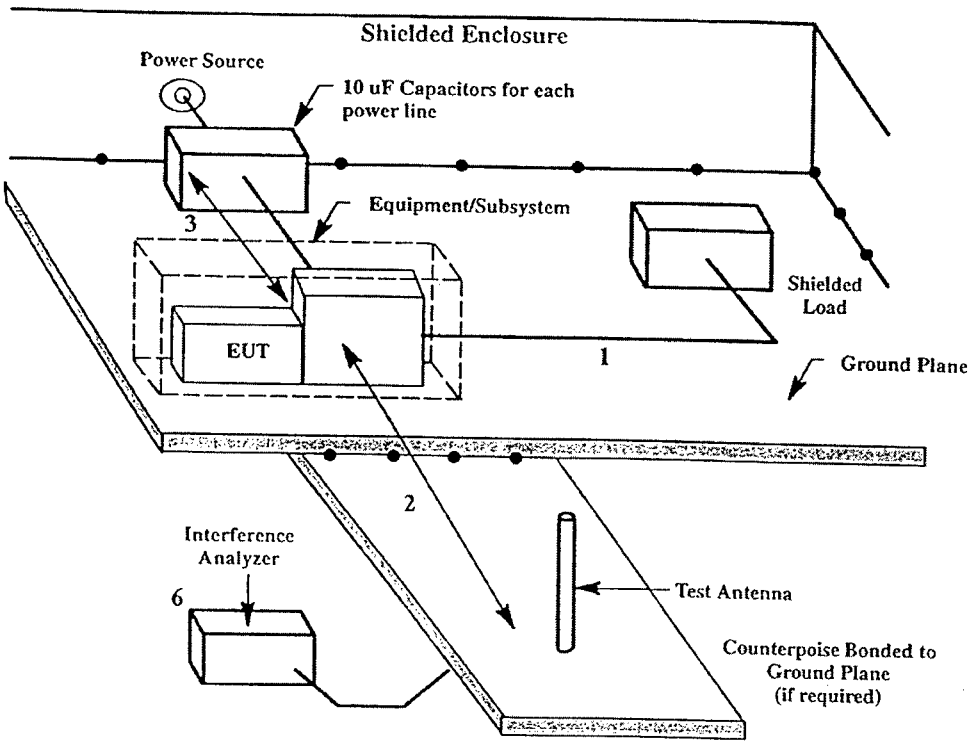


Notes:

1. Cables are placed at least 5 cm above ground plane.
2. Requirement at 1 meter.
3. Input power leads are greater than two meters and less than three meters in length.
4. If the test sample is comprised of more than one unit, interconnecting cable lengths of at least 2 meters shall be exposed to the test antenna except for deliverable cables whose length is less than 2 meters.
5. Matching network is mounted below counterpoise.
6. For measurements above 30 MHz, the interference analyzer shall be placed outside the shielded enclosure.

**Figure 42. Typical Test Setup for Radiated Measurement (RE02)**

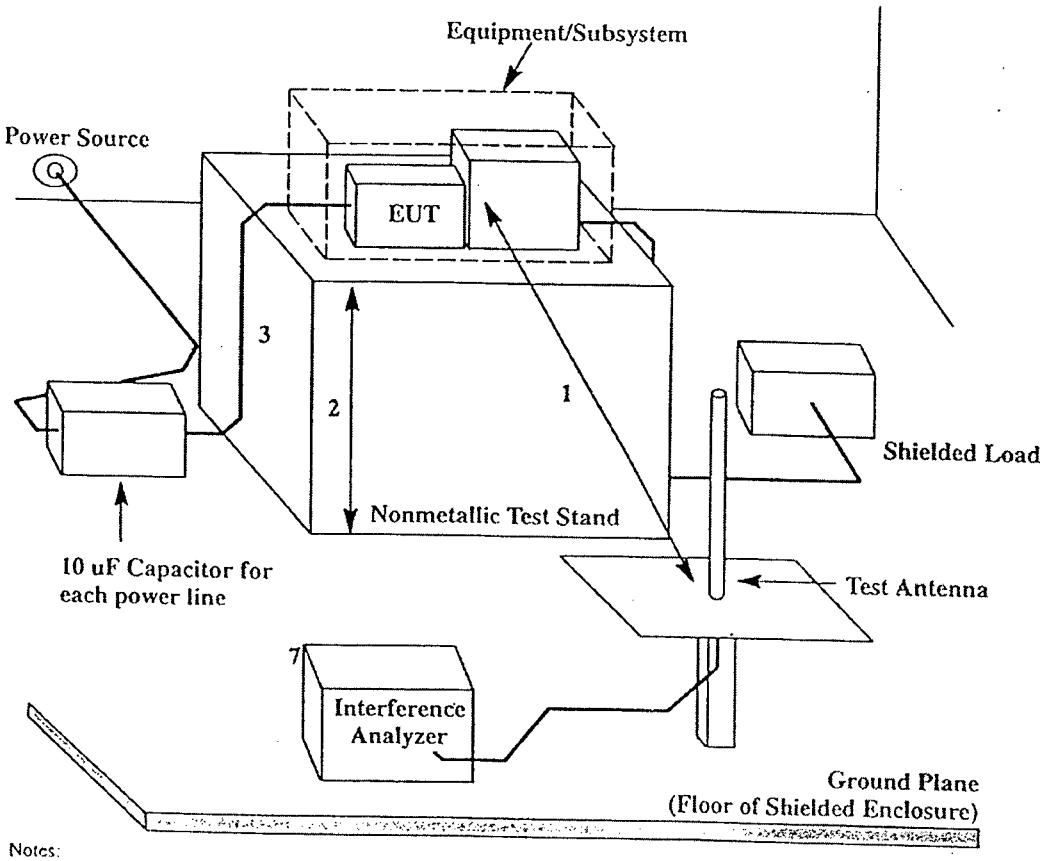


Notes:

1. Required at 1 meter.
2. Typically 1 meter.
3. Power leads are greater than 2 meters and less than 3 meters in length.
4. Height of test antenna shall be located for maximum pickup.
5. Only the test sample and the Interference Analyzer shall be connected to the enclosure power.
6. Matching network is mounted below the counterpoise.
7. For measurements above 30 MHz, the interference analyzer shall be placed outside the shielded enclosure.

**Figure 43. <u>Typical Test Setup for Radiated Measurements on Portable Equipment (RE02)</u>**

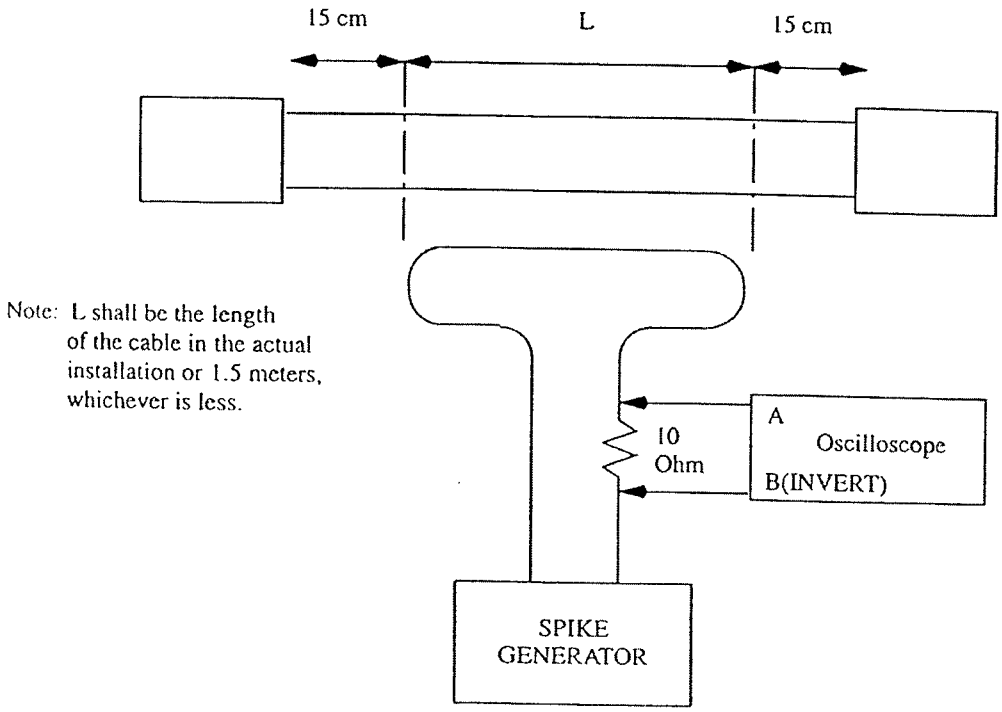


**Figure 44.** **RS02 Cable Test Setup**

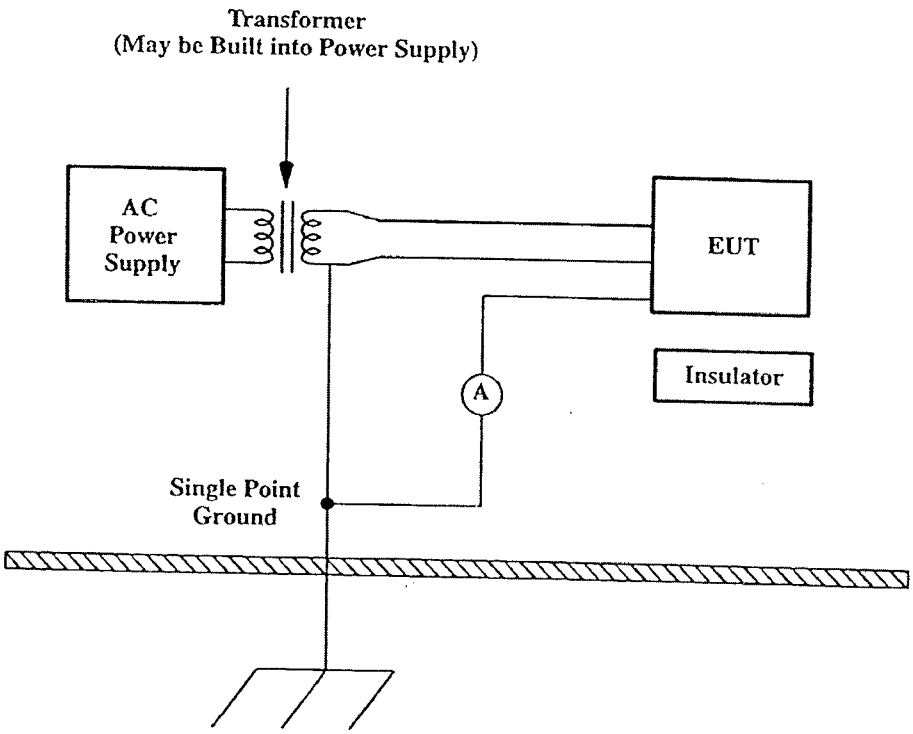


**Figure 45. Typical Test Setup, Power User Leakage Current (LE01)**

This Page Intentionally Left Blank

# APPENDIX C
# INSTRUCTIONS FOR LABELS AND DECALS

## C.1 Introduction

Appendix C provides the instructions for the approval of payload labels. The development of labels will be a joint process requiring the cooperative efforts of ISS Payload Label Approval Team (IPLAT), MSG Investigation Integration Team and the MSG Investigator. The process for developing labels, from the beginning to the delivery of flight certified labels which have been approved by the IPLAT, is documented in Figure 46. To understand the priorities of the instructions, the following definitions need to be applied throughout Appendix C. Statements with "must" will be used for instructions which are required to be met for the IPLAT to provide approval. Statements with "should" will be used for instructions which are incorporated into the label unless adequate justification is provided to IPLAT to warrant exempting the label instruction.

## C.2 Responsibilities

The Investigator shall provide label drawings, label location drawings and information sufficient to enable IPLAT to determine the instructions herein are met. The Investigator shall coordinate with the MSG Integration Team before submitting the label drawings for approval. IPLAT is responsible for reviewing all payloads labels, providing guidance to the PD and granting approval based on the instructions herein. IPLAT is also responsible for performing a human engineering assessment of the labels and ensuring the labels are appropriate from a human engineering perspective including commonality, standardization, and operations nomenclature. Upon receiving Form 733b, IPLAT has 10 working days for either assessing, approving, and verifying the labels or for providing redlines to the label drawings. The PTR is responsible for resolving issues and disagreements between the PD and IPLAT.

## C.3 IPLAT Approval Instructions

IPLAT will use the following instructions in reviewing and providing the approval of payload labels.

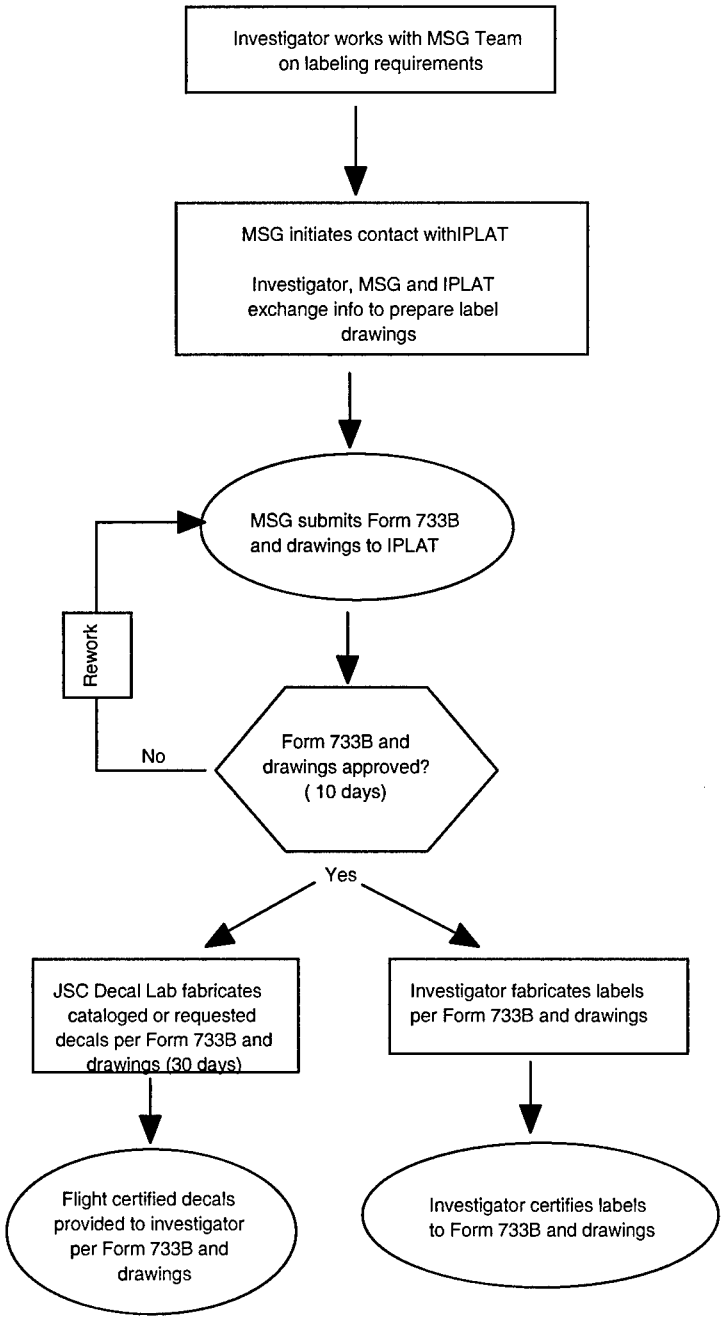


**FIGURE 46. Label Process**

### C.3.1 Ground Assembly and Handling

Product marking for ground assembly and handling should be in accordance with MIL–STD–130, section 4, except paragraph 4.1.c.

### C.3.2 Function Considerations

a. Decals and placards should contain information required by the user, the purpose, the function, and/or the functional result of the use of equipment items. Engineering characteristics or nomenclature may be described as a secondary consideration.

b. Instrument decals and placards, for example, should be labeled in terms of what is being measured or controlled. Calibration data may be included where applicable.

### C.3.3 Payload Orientation

a. Payload labeling, displays, and controls must have a consistent rack vertical orientation arrangement with the rack vertical axis origin at the bottom of the rack hinge point.

b. Payload labels required for operations with the rack(s) rotated should be oriented with respect to required crew positions.

### C.3.4 Container Content Identification

Deleted (moved to C.3.5.4.1)

### C.3.5 Labeling Design

### C.3.5.1 Labeling Standardization

a. Decals needed by the PD which are available in JSC 27260, Decal Process Document and Catalog must be obtained from the Decal Design & Production Facility (DDPF). Examples of labels found in the catalog are: IMS, PFE, toxicology, hazardous, cautions and warning, rack power switch, fire indicators, etc. The DDPF is also available to the PDs for fabricating labels not found in JSC 27260.

b. Labeling should be standardized between and within systems.

c. Different labeling categories should be distinct from one another.

d. Nomenclature on labels must conform to the operational nomenclature provided in SSP 50254, Operations Nomenclature and JSC 36044.

e. Label Titles – The titles of equipment, displays, controls, switch positions, connectors, LEDs, stowage containers, etc., must be listed in upper case letters only.

This includes abbreviations and acronyms. See Section C.3.5.6 for Operating Instructions labeling requirements.

Title nomenclature must be consistent with procedural handbooks and checklists.

f. General To Specific Principle – More general, or important information should be placed above or to the left on a label(s). Increasingly more specific, or less important information should be placed lower or to the right, with the most specific, least important information on the bottom or furthest right.

g. Keypads – Non–COTS keypads on payloads should use mixed case (upper and lower case) letters.

### C.3.5.2 Readability

a. Decals and placards should be as concise and direct as possible.

b. Abbreviations

1) Deleted
2) Periods should be omitted except when needed to preclude misinterpretation.

c. Decal and Placard Life

1) Payloads must provide labels that are readable for the lifetime of the payload's operations, which are replaceable.

d. Language

1) Decals and placards must be written in the English language.
2) If dual languages are used, English must be used first and with lettering at least 25% larger than the secondary language.

e. Decals and placards should be designed so as to minimize visual clutter.

f. Illumination – Labels and markings should be designed to be read at all general illumination levels and color characteristics.

g. Displays and Controls Title Selection

Physical Hardware – When verbs are used to label physical hardware (buttons, switches, controls, etc.), the present tense should be used. For example: OPEN or CLOSE, BEGIN, or END, START or STOP, etc.

Physical Hardware Linked to Software Displays – If physical hardware is linked to and/or represented by software displayed data or controls (i.e. LCD), the labels for the physical hardware and the software representation must use the same terminology.

### C.3.5.3 Label Placement

a. All labels must be placed on the payload hardware in accordance to the label location drawings. See Figure 47 for miscellaneous label placement example.

   (1) If the payload possesses a dominant face, or side, and space permits, the Payload Name label should be placed in the upper left corner or that face. This label must spell out the name of the rack (acronym may follow in parentheses). The IMS label should be placed to the right of the Payload Name label.

   (2) If the payload does not possess a dominant face, the Payload Name and IMS labels
   should be placed in a prominent location, maintaining their respective left to right arrangement if possible.

   (3) The font size of the Payload Name label should be the largest one for the payload.

b. Part Number and Serial Number Labels – Part Number and Serial Number labels should be placed together for ease of identification. The Part Number label should be arranged to the left or above the Serial Number label (general to specific principle). P/N and S/N are the standard representations of Part Number and Serial Number, respectively.

c. Loose Equipment – Payload Name labels for loose equipment should be placed on the left or at the top of the item. Acronyms may be used as long as the full name is spelled out on the label for main unit. The IMS label should be placed immediately to the right, or below the Payload Name label. In the case of very small equipment items, an IMS label with the equipment's name in the optional text portion is sufficient to satisfy both the IMS and Name label requirement.

d. Orientation – All markings and labels must be oriented with respect to the local worksite plane so that they read from left to right. Vertical orientation is permissible only when the marking or label dimensionally does not fit in the required location.

e. Label Position – Labels must be placed above connectors, switches, LEDs, displays, controls, etc. Labels may be placed in other locations only when they cannot dimensionally fit in the required location.

f. Visibility – Lables must be placed on equipment so that they are visible when the equipment is used or accessed. Markings should be located such that they are perpendicular to the operator's normal line of sight whenever feasible and should not be less than 45 degrees from the line of sight.

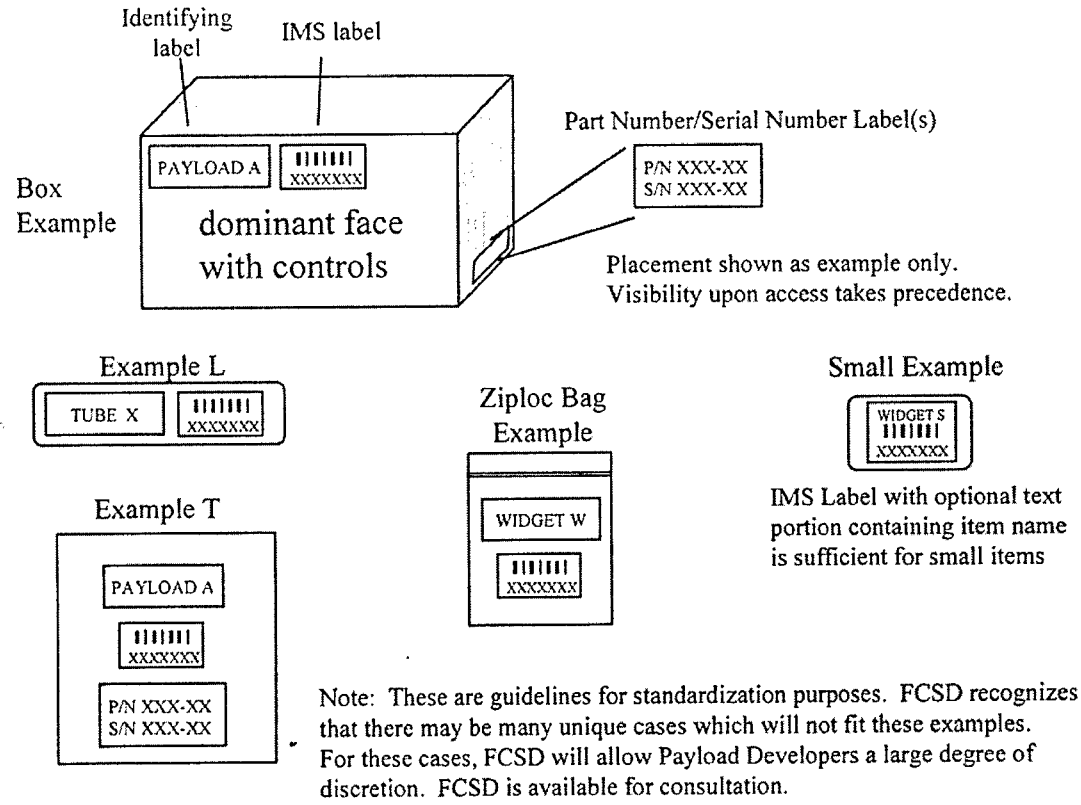


**Figure 47. Miscellaneous Label Placement Examples**

### C.3.5.4 Equipment Labeling

#### C.3.5.4.1 Equipment Identification

a. All items on a payload must be identified with a label, including, but not limited to: displays, controls, switches, connectors, LEDs, containers, vents, etc., such that these items can be clearly referenced in crew procedures. Only those items whose use is obvious to the crew (e.g., food table, windows, etc.) are exempt from this instruction. The font size for these labels must be smaller than the main label naming the payload.

b. Containers must be labeled to identify their contents.

c. Loose equipment must be marked with nomenclature that describes the function of the item and its pertinent interfaces.

d. Multi–quantity Items

(1) Multi–quantity items that require individual distinction but are not serialized must be individually numbered.

(2) Serial Numbers – Multi–quantity items that are serialized should display the serial number as part of the identification.

(3) Containers containing multiple quantities of the same item should use a number in parentheses, after the name, to indicate the quantity (i.e. "TEST TUBES (4)", indicates there are four test tubes in the container).

### C.3.5.4.2 Equipment Coding

#### C.3.5.4.2.1Utility Coding

a. Payload pipes, electrical cables, fluid and gas lines, and hoses which are contained entirely within a payload. These items are defined as payload utilities. Payload utilities must meet the requirements of Section C.3.5.4.2.1.b (below).

b. Payload utilities must be labeled to indicate the equipment to which they belong and the connectors to which they mate. This includes items intended to be removed or connected on–orbit (excluding internal unplanned maintenance cables).

(1) Electrical Cables and Associated Hardware. The cable end plug (the movable, less fixed, connector of a mating pair) must be designated with a "P" (i.e. P1). The connector on the hardware (the less movable, more fixed, connector of a mating pair) must be designated with a "J" (i.e. J1) Cables which are permanent parts of assemblies (i.e. receptacle cables behind front panels) are exempt from the "P" requirement. The plug number and receptacle number for a mating pair should be identical (i.e. P1 mates with J1), except for generic cables, which have multiple connection possibilities. See Figure 48 for a cable labeling example.

(2) A payload utility line must contain a main identifying label with the information below, preferably arranged in vertical order. This label must be placed in the middle of the utility line, or at intervals not to exceed 1 meter for long utility lines. See Figure 48 for a cable labeling example.

– The name of the piece of equipment to which the payload utility line belongs.
– The name of the payload utility line (optional).
– The Part Number of the payload utility line.
– The Serial Number of the payload utility line.

(3) A payload utility line must contain one (and only one) IMS label. It must be placed
to the right of the main identifying label, as shown in Figure 48. If the utility line requires multiple equipment name labels space at 1 meter intervals per #4, the IMS label must be placed at the center of the line.

(4) Labels at the terminal ends of a payload utility line must contain the information below. Vertical order is the preferred arrangement. When the circumference of the utility line is too small to accommodate a label that wraps around the line with text

arranged vertically, a tag, or flag style label should be used. For cases where wear and tear of such flags is a concern (i.e. through frequent use), a horizontal arrangement of the information is allowed. See Figure 48 for cable label examples.

– The name of this end of the payload utility line (i.e. for cables, P1).
– The word "TO" followed by the name of the piece of equipment to which this end of
the payload utility line connects to. If this end can attach to multiple connector ports (i.e. generic cables), this requirement is not necessary.
– The name of the receptacle that this end of the payload utility line connects to (i.e. for cables, J1). If this end can attach to multiple connector ports (i.e. generic cables), this requirement is not necessary.

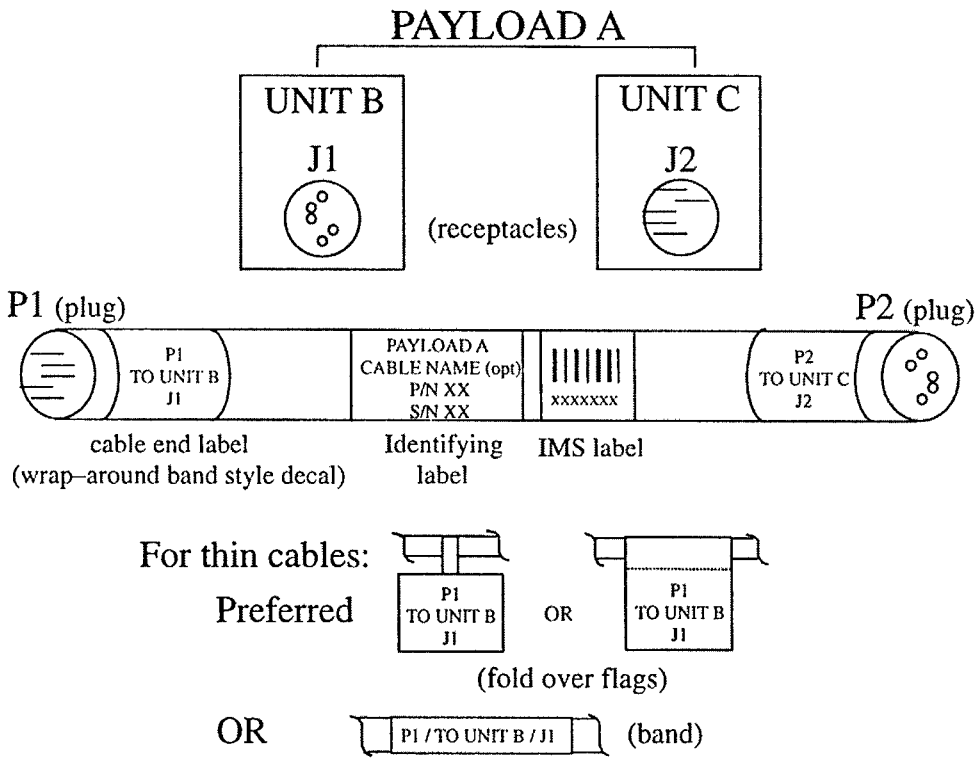


Note: "P" designates cable end plugs and "J" designates receptacles on hardware regardless of gender (pins/sockets)

**Figure 48. <u>Cable Labeling Example</u>**

### C.3.5.4.2.2 Color Coding

a. The colors red and yellow must only be used for Caution and Warning labels. See section C.3.5.9 for Caution & Warning labeling requirements.

b. Hazard Labels – Hazard labels have their own, unique coding scheme, of which color is one factor. See Section C.3.5.9.i for instructions.

c. Identification/Connectivity – Color coding used for component identification or to denote connectivity relationships must combine color with nomenclature (i.e. hardware name and the payload it belongs to, simple number, part number, etc.) such that when those components are referred to within procedures, it is clear which components the procedures are referring to. The only color restriction is listed in paragraph A (red and yellow cannot be used).

Color identification numbers used below are per FED–STD–595–B.

d. Color Difference

(1) Only one hue within a color category (e.g., reds, greens) should be used on the decals or placards within the same integrated rack.

(2) That color must always be associated with a single meaning within the same system or integrated rack.

e. Number of Colors – No more than 9 colors, including white and black, must be used in a coding system.

f. Placards – Placards should adhere to the accepted combinations of markings and background color listed below:

– Markings/Background
– White/Black
– Black/Yellow
– Black/White
– Yellow/Blue
– White/Red
– Red/White
– Blue/Yellow
– White/Grey

### C.3.5.5 Location and Orientation

#### C.3.5.5.1 Location Coding

Access Panels - maintenance access panels must be labeled to assist the crew in locating the panel for maintenance activities.

a. Access panel identification labels should be located in the lower left position on the panel with respect to the local vertical orientation.

#### C.3.5.5.2 Alignment Marks/Interface Identification

a. Orientation – When a piece of hardware requires a specific orientation which cannot be identified by alignment marks, arrows and/or labels should be used to indicate the proper orientation.

b. Tethered Equipment – Interface identification should not be used for movable items tethered to a mating part (e.g., dust cap for an electrical connector, hinged lid for a stowage container).

### C.3.5.6 Operating Instruction

a. Location – Equipment operating instructions should be located on or adjacent to equipment.

b. Equipment Name – The instructions should have the title of the equipment to be operated centered above the text.

c. Grouping – Instructions should be grouped and titled by category (e.g., installation, removal, activation, calibration, etc.).

d. Case – Instructional text below titles must use upper and lower case letters.

e. Title Selection – The titles of equipment, displays, controls, switch positions, and connectors should be listed in upper case letters only.

   - Title nomenclature should be consistent with procedural handbooks and checklists.

f. Required Tools – Instruction for removal of stowage items should list any tools required prior to the instructional text.

   - When tools are required to remove stowage items, markings should be used for the location of the fasteners to be removed.

### C.3.5.7 Stowage Container Labeling

a. Each stowage container should display the contents on its front surface visible to the crewmember.

b. Provisions must be made to permit in-flight revisions to or replacement of stowage labels on all stowage containers.

c. Subdivided Containers:

(1) If a stowage container is subdivided internally into smaller closed containers, the sub-containers must carry a list of contents.

(2) If the available marking space on a sub-container is insufficient to display the complete content titles, a contents list must be displayed elsewhere and clearly identified as belonging to the sub-container.

(3) The specific contents of each sub-container and its code must be listed on the front surface of its container or near it.

d. Individual–Crew Items – Items allocated to a specific crewmember should be identified on the listing with the user's title, name, or other coding technique.

e. Similar Item Labeling – Containers with designated locations for placement of equipment set (e.g., socket wrenches in a tool kit) should have each location identified with the title of the item stowed.

### C.3.5.8 Grouped Equipment Items

a. Functional groups of three or more equipment items (i.e. displays, controls, switch positions, connectors, LEDS, etc.) must be identified (e.g., by common color, by boundary lines). Functional groups of equipment items are all associated or connected with a common system or purpose. (e.g., CABIN AIR, FURNACE A, EXPERIMENT "M", PANEL LIGHTING). Two functionally related items should be grouped when such grouping provides clarification of purpose and/or distinquishes them from surrounding items. See Figure 49 for grouping label examples.

b. Labels must be located above the functional groups they identify.

c. When a line is used to enclose a functional group and define its boundaries, the labels must be centered at the top of the group, in a break in the line. When it is not possible to center the text at the top, the text may be placed elsewhere along the perimeter of the boundary line, but local vertical orientation or the text must be maintained.

(1) The width of the line must not be greater than the stroke width of the letters.

(2) The line must form an enclosed rectangle, or box, with rounded corners. Deviations from the rectangular shape are allowed when dimensional restrictions preclude a perfect rectangle.

d. When displays and controls are used together in adjustments or activation tasks, visible labels or markings must indicate their functional relationships.

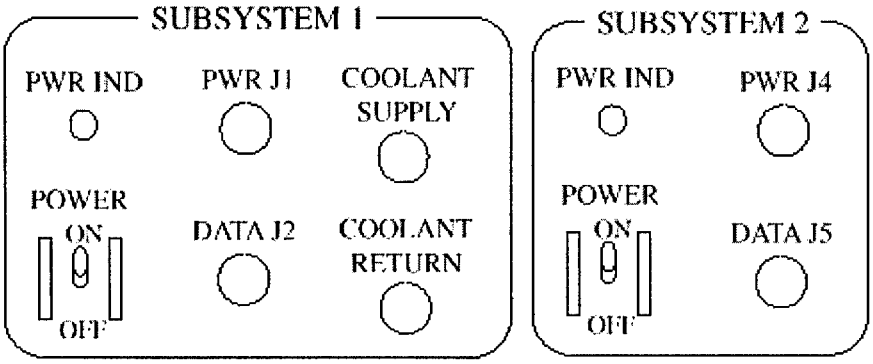


**Figure 49. Grouping Label Example**

### C.3.5.9 Caution and Warning Labels

Caution and warning labels are required for indicating potentially undesirable conditions.

a. Caution and warning labels must be standardized between and within systems.

b. Caution and warning labels must be distinct from one another.

c. Caution and warning labels must identify the type of hazard and the action that would prevent its occurrence.

d. The caution and warning markings must be located in a visible area.

e. Emergency-Use Items

(1) Decals and placards on emergency-use items (e.g., repair kits, emergency lighting,fire extinguisher, etc.) must display the words "EMERGENCY USE" surrounded by diagonal red and white stripes either on the item or adjacent to it.

(2) The emergency type warning stripes must be alternate red and white.

(3) The red and white stripes should be of equal width.

(4) There must be no fewer than four red stripes and three white stripes.

(5) The striping must be applied at a 45 degree angle rotated clockwise from the vertical.

(6) The striping must begin and end with a red stripe.

(7) The text must be white letters on the red background or red letters on a white background.

(8) For items located within a storage container, the diagonal striping must be applied to the door of the container and the titles of the emergency items must be included on the marking instead of the words EMERGENCY USE.

f. Warning Stripe Specification

(1) Caution/warning decals and placards must be surrounded by diagonal yellow and black stripes.

(2) The caution/warning type stripes must be alternate yellow and black.

(3) The yellow and black stripes should be of equal width.

(4) There must be no fewer than four yellow stripes and three black stripes.

(5) The striping must be applied at a 45 degree angle rotated clockwise from the vertical.

(6) The striping must begin and end with a yellow stripe.

(7) The text must be black letters on the yellow background.

g. Switches and Buttons

(1) The striping around a switch or button must not be wider than 25mm (1 in.) or narrower than 3 mm (0.125 in.).

(2) If one side of a switch or button has less than 3 mm (0.125 in.) space, no striping must be applied to that side.

h. Label Specifications - Hazard identification labels should use the letter size as specified in Figure 50.

i. Hazard Labels

(1) Chemicals – The standard hazard class decals found in JSC 27260, Decal Process Document and Catalog, must be used to identify the proper hazard class of payload chemicals (i.e. chemicals in solid, liquid, or gaseous states). See NSTS 077000, Volume 14, Appendix 9, Section 5.6.3 for hazard class definitions. These decals use color coding (red, orange, yellow, blue, and green), as well as shape and textual content, in their design.

(2) Other standard hazard decals that are found in JSC 27260, Decal Process Document and Catalog that must be used include: biological hazard, radiation hazard, sharps hazard (to be added), and batteries (to be added).

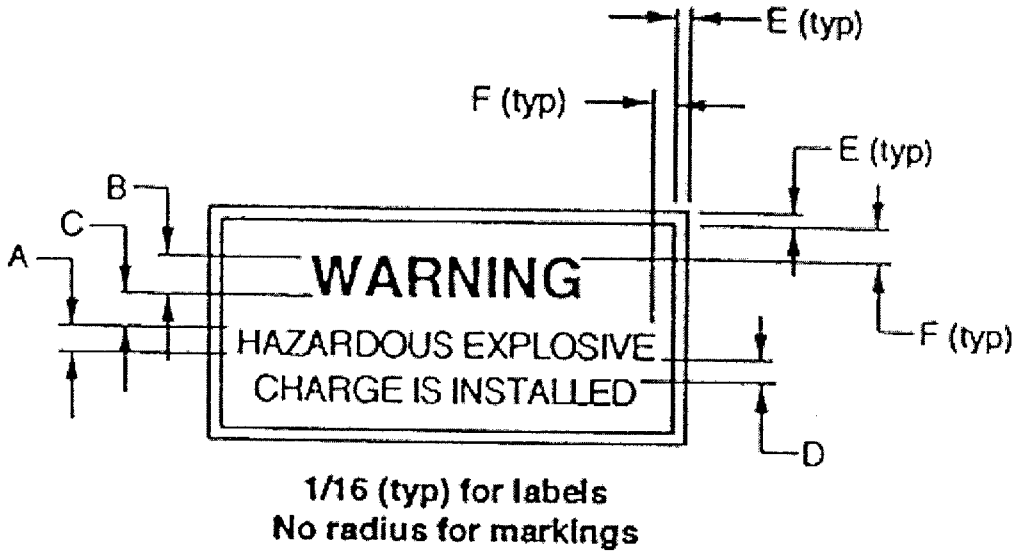


**Figure 50. <u>Hazard Identification Label Letter Size</u>**

1/16 (typ) for labels
No radius for markings

A – Text or minor lines of lettering = A
B – Heading or major line of lettering = 1.25A to 2A
C – Spaceing between heading and text = 0.65A to A
D – Spacing between lines of text = 0.60A
E – Border width = 0.60A
F – Background borde = A

### C.3.5.10 Alphanumeric

#### C.3.5.10.1 Font Style

a. The font style used on decals, placards, and labels must be Helvetica or Futura demibold. If there are fit problems:

(1)The use of condensed type (Helvetica Condensed) or abbreviations is the preferred method of solving line length.
Or

(2)For engraved markings which are not able to exactly match the above required font, the engraved marking should match the Helvetica font as nearly as possible.

Note: Helvetica is the preferred font.

b. Stenciled Characters – Stencil–type characters should not be used on display/control panels or other equipment.

### C.3.5.10.2 Punctuation

a. Periods – Periods (.) should not be used in equipment labels.

b. Hyphens – Hyphens (–) should not be used in equipment labels, except in part numbers.

c. Parentheses and Ampersands – In general, parentheses and ampersands should not be used on payload equipment. Parentheses may be used to enclose acronyms after spelled out names (See Section C.3.5.3) and to designate multiple quantities of an item (See Section C.3.5.4.1.d.3). Ampersands may be used where the substitution of backslashes (/) would remove or distort the intended meaning (i.e. PUSH & HOLD vs. PUSH/HOLD).

d. Slashes – The backslash (/) may be used in place of the words "and" and "or" and may be used to indicate multiple functions.

### C.3.5.10.3 Special Character

a. Subscript and Superscript Size – Subscripts and superscripts should be 0.6 to 0.7 times the height of associated characters.

b. Subscripts – Numeric subscripts and upper case letter subscripts should be centered on the baseline of associated characters.

c. Lower Case Letter Subscripts –The base of lower case letters and the ovals of g, p, q, etc., should be at the same level as the base of adjacent capital letters.

d. Degree Symbol – The degree symbol should be centered on an imaginary line extended from the top of the F or C symbols.

e. Pound or Number Symbol (#) – The pound or number symbol should be centered on an imaginary line extended from the top of the associated numerals and placed two stroke widths away from them.

### C.3.5.10.4 Character Height

a. Character Height – Character height depends on viewing distance and luminance level. At a viewing distance of 710 mm (28 in.), the height of letters and numerals should be within the range of values given in Table XXXVIII.

b. Variable Distance – For a distance (D) other than 710 mm (28 in.), multiply the values in Table XXXIII by D/710 mm (D/28 in.) to obtain the appropriate character height.

**Table XXXVIII. Character Height – 710 mm (28 in) Viewing Distance**

| Markings | Character Height | |
|---|---|---|
| | 3.5 cd/m 2 (1ft–L) or below | Above 3.5 cd/m 2 (1ft–L) |
| For critical markings, with position variable (e.g., numerals on counters and settable or moving scales) | 5–8 mm (0.20–0.31 in.) | 3–5 mm (0.12–0.20 in.) |
| For critical markings, with position fixed (e.g., numerals on fixed scales, controls, and switch markings, or emergency instructions) | 4–8 mm (0.16–0.31 in.) | 2.5–5 mm (0.10–0.20 in.) |
| For noncritical markings (e.g., identification labels, routine instruc-tions , or markings required only for familiarization) | 1.3–5 mm (0.05–0.20 in.) | 1.3–5 mm (0.05–0.20 in.) |

c. Size Categories – Characters used in labeling should be graduated in size. To determine character height, all nomenclature on a label may be divided into three categories: titles, subtitles, and text. The nominal heights at a viewing distance of 710 mm (28 in.) for each category should be:

- Titles, 5 mm (0.19 in.)
- Subtitles, 4 mm (0.16 in.)
- Text, 3 mm (0.12 in.)

When more than one character size is used in labeling, there should be at least a 25 percent difference in the character height for each character set.

d. Space Limitations – The use of the same size letters and numerals for all categories on a label is acceptable for solving space limitation and clarity problems. The height of lettering and numerals should be not less than 3 mm (0.12 in.).

### C.3.5.10.5 Character Width

a. Letters – The width of letters should be 0.6 of the height, except for the letter "I," which should be one stroke in width, the letters "J" and "L", which should be 0.5 of the height, the letter "M", which should be 0.7 of the height, and the letter "W," which should be 0.8 of the height.

b. Numerals – The width of numerals should be 0.6 of the height, except for the numeral "4", which should be one stroke width wider and the numeral "1", which should be one stroke in width.

c. Wide Characters – When wider characters are used on a curved surface, the basic height–to–width ratio should be increased to 1:1.

### C.3.5.10.6 Stroke Width

a. Height–to–Stroke Ratio – Marking letters and numerals should have a height–to–stroke ratio of 5:1 to 8:1.

b. Transillumination Background – Opaque markings on a transilluminated lighted background should have a height–to–stroke ratio of 5:1 to 6:1.

c. Transilluminated Markings – Transilluminated markings on a dark background or markings used on integrally lighted instruments should have a height–to–stroke ratio of 7:1 to 8:1.

d. General Purpose Illumination – Characters used on display panels and equipment when viewed under general purpose flood lighting or normal display conditions as specified in Table XXXIX should have a height–to–stroke ratio of 6:1 to 7:1.

### C.3.5.10.7 Character Measurement

a. Measurement – All letters and numeral measurement should be made from the outside edges of the stroke lines for other than machine engraving on opaque surfaces.

b. B. Engravings – For all mechanical engraving on opaque surfaces, the dimensions controlling the size of letters and numerals should be measured from centerline to centerline of the stroke.

### C.3.5.10.8 Space

a. Character Spacing – The spacing between letters within words and between digits in a multi–digit number should be the equivalent of one stroke width between two straight–sided letters such as H and l. (This instruction intended to accommodate the normal commercial typographical practice of spacing letters to achieve a, consistent

visual continuity. This permits close spacing of open letters such as C and T to avoid large apparent gaps.)

b. Word Spacing – The spacing between words should be the equivalent of the letter W between two straight–sided letters such as N and F.

c. Line Spacing

(1) The spacing between lines of related text should be 0.5 of upper case letter height.

(2) Spacing between headings and text should be 0.6 to 1.0 of upper case letter height.

### C.3.5.11 Bar Coding

The investigation will work with the IIT for IMS label registration.

a. Racks, subracks, stowage trays, loose equipment, consumables, and ORUs must have an inventory management label in accordance with SSP 50007.

b. Decals, labels, or placards using bar coding for identification must use a code 39 bar code number system per MIL-STD-1189, and SSP 50007.

c. Deleted.

### C.3.6 Deleted (Incorporated into C.3.5.4.2.2)

### C.3.7 Scale Marking

a. Accuracy

(1) The precision of scale marking should be equal to or less than the precision of the input signal.

(2) In general, scales that are to be read quantitatively to the nearest graduation mark should be designed so that interpolation between graduation marks is not necessary. Interpolation should be limited to one half the distance between minor graduation marks.

b. Interval Values

(1) The graduation intervals should progress by 1, 5, or 2 units of decimal multiples thereof, in that order of preference.

(2) The number of graduation marks between numbered graduation marks should not exceed 9.

c. Scale Markings (High Luminance – above 1 ft–L)

(1) The minimum width of major, intermediate, and minor marks should be 0.32 mm (0.0125 in.)

(2) The length of major, intermediate, and minor graduation marks should be at least 5.6mm, 4.1 mm, and 2.5 mm (0.22, 0.16, and 0.09 in.), respectively.

(3) The minimum distance between major graduation marks should be 13 mm (0.5 in.).

(4) Minor graduation marks may be spaced as close as 0.89 mm (0.035 in.), but the distance should be at least twice the stroke width for white marks on black dial faces and at least one stroke width for black marks on white dial faces.

d. Scale Markings (Low Luminance – below 1 ft–L)

(1) The minimum width of a major graduation should be 0.89 mm (0.035 in.), the minimum width of an intermediate graduation should be 0.76 mm (0.030 in.), and the minimum width of a mirror graduation should be 0.64 mm (0.025 in.).

(2) The length of major, intermediate, and minor graduation marks should be at least 5.6 mm, 4.1 mm, and 2.5 mm (0.22, 0.16, and 0.10 in.), respectively.

(3) The minimum distance between major graduation marks should be 16.5 mm (0.65 in.).

(4) Graduation marks should be spaced a minimum of 1.5 mm (0.06 in.) between centerlines.

This Page Intentionally Left Blank

# Appendix D

## Table D1 EXHAUST GASES COMPATIBLE WITH THE USL VES WETTED MATERIALS (page 1 of 3)

| Gas | Max Concentration | Additional Constraint |
|---|---|---|
| Acetaldehyde | 100% | |
| Acetic Acid | 100% | |
| Acetonitrile | 100% | |
| Acetylene | 100% | |
| Acrolein | 100% | |
| Acrylonitrile | 100% | |
| Argon | 100% | |
| Benzene | 100% | Note 3 |
| Benzonitrile | 100% | Note 3 |
| 1,3-Butadiene | 100% | |
| n-butane | 100% | |
| Butene | 100% | |
| 1-Butene | 100% | |
| 2-Butanone | 100% | |
| Cabin Air | 100% | |
| Carbon Dioxide | 100% | |
| Carbon Monoxide | 100% | |
| Chlorobenzene | 100% | Note 3 |
| Chloroethane | 100% | |
| Chloromethane | 100% | |
| cis-2-Butene | 100% | |
| 1,3-Cyclopentadiene | 100% | |
| Cyclopentanone | 100% | Note 3 |
| Cyanogen chloride | 100% | |
| Cyanogen bromide | 100% | Note 3 |
| n-Decane | 100% | Note 3 |
| 1,1-Dichloroethane | 100% | Note 3 |
| 1,1-Dichloroethene | 100% | Note 3 |
| Dichloromethane | 100% | Note 3 |
| Ethane | 100% | |
| Ethene | 100% | |
| Ethanol | 100% | |
| Ethyl benzene | 100% | Note 3 |
| Ethyl isopropyl ether | 100% | Note 3 |
| Ethyl methyl ether | 100% | |
| 2-Ethyl-4-Methyl-1,3-Dioxolane | 100% | Note 3 |
| Ethyl n-Propyl Ether | 100% | Note 3 |

**Table D1 EXHAUST GASES COMPATIBLE WITH THE USL VES WETTED MATERIALS (page 2 of 3)**

| Gas | Max Concentrate | Additional Constraint |
|---|---|---|
| Formaldehyde | 100% | |
| Helium | 100% | |
| n-hexanal | 100% | Note 3 |
| Hexane | 100% | Note 3 |
| Heptane | 100% | Note 3 |
| Hydrogen | 100% | |
| Hydrogen cyanide | 100% | |
| Hydrogen sulfide | 100% | |
| Isopropanol | 100% | |
| Isopropyl formate | 100% | Note 3 |
| Krypton | 100% | |
| Methane | 100% | |
| Methanol | 100% | |
| Methyl acetate | 100% | |
| Methyl acrylate | 100% | Note 3 |
| 2-Methyl-2-butenal | 100% | Note 3 |
| 1-(1-Methylethoyx)-2-Propanone | 100% | Note 3 |
| Methyl formate | 100% | |
| Methyl methacrylate | 100% | Note 3 |
| 2-Methyl propane | 100% | |
| 2-Methyl propenal | 100% | |
| 2-Methyl propene | 100% | |
| Mixtures of gases in Appendix D1 | | Note 2 |
| Neon | 100% | |
| Nitrogen | 100% | |
| Norflurane | 100% | Note 3 |
| Octane | 100% | Note 3 |
| o-Xylene | 100% | Note 3 |
| Oxygen | (not more than 30% by volume vented from the experiment chamber) | |
| Pentanal | 100% | Note 3 |
| Pentane | 100% | |
| Propadiene | 100% | |
| Propane | 100% | |
| Propanol | 100% | |
| 2-Propanone | 100% | |
| Propene | 100% | |

**Table D1 EXHAUST GASES COMPATIBLE WITH THE USL VES WETTED MATERIALS (page 3 of 3)**

| Gas | Max Concentration | Additional Constraint |
|---|---|---|
| n-Propyl acetate | 100% | Note 3 |
| Propyl formate | 100% | Note 3 |
| n-Propyl isopropyl ether | 100% | Note 3 |
| Propyne | 100% | |
| Radon | 100% | |
| Styrene | 100% | Note 3 |
| Sulfur Dioxide | 100% | |
| Sulfur hexafluoride | 100% | Note 3 |
| tert-Butyl alcohol | 100% | |
| Toluene | 100% | Note 3 |
| 1,1,1-Trichloroethane | 100% | Note 3 |
| Trichlorofluoroethane | 100% | Note 3 |
| 1,2,4-Trimethylbenzene | 100% | Note 3 |
| 2,2,4-Trimethyl-1,3-dioxolane | 100% | Note 3 |
| Vinyl acetate | 100% | Note 3 |
| Vinyl Chloride | 100% | |
| Water Vapor | 100% | |
| Xenon | 100% | |
| m-Xylene | 100% | Note 3 |

Note 1: Vented cabin air will contain small percentages of additional gases at up to the maximum levels defined in SSP41000, Table VII, Spacecraft Maximum allowable concentrations (SMAC), or NHB 8060.1B, Appendix D. If gases are not referenced in the above documents, the Investigator shall use the Materials and Processes Technical Information System (MAPTIS) SMAC values, including the date the information was taken form MAPTIS, as MAPTIS is not under configuration control. Cabin air particulates are limited to levels identified in SSP 41000, paragraph 3.2.1.1.1.15.

Note 2: Combinations of all gases must be analyzed and are constrained as specified to paragraph 3.5.1.5, this table only represents the gases that are compatible with the USL VES wetted materials.

Note 3: Each proposed vent gas with a molecular weight greater than 75 amu shall be analyzed in accordance with 3.5.1.5.2.

**Table D2 EXHAUST GASES NOT COMPATIBLE WITH THE USL VES WETTED MATERIALS**

| Gas | Notes |
|---|---|
| Hydrogen bromide | Note 1 |
| Hydrogen chloride | Note 1 |
| Hydrogen fluoride | Note 1 |
| Hydrogen iodide | Note 1 |
| Nitric acid | Note 1 |
| Nitrogen dioxide | Note 1 |
| Nitrogen tetroxide | Note 1 |
| Perchloric acid | Note 1 |
| Phosgene | Note 1 |
| Phosphoric acid | Note 1 |
| Sulfuric acid | Note 1 |

Note 1: These gases shall be containerized, stored, or transported by the investigation, unless the concentrations of the gases are no more than the maximum levels defined in SSP41000, Table VII, SMAC or NHB 8060.1B, Appendix D. If gases are not referenced in the above documents, the Investigator shall use the Materials and Processes Technical Information System (MAPTIS) SMAC values, including the date the information was taken form MAPTIS, as MAPTIS is not under configuration control

# APPENDIX E

## VERIFICATION DEFINITION SHEETS

This appendix contains the Verification Definition Sheets (VDS). The VDS provide the complete set of verification requirements necessary to ensure compliance with the interface and design requirements contained in section 3. The verification requirements in the Appendix shall be complied with by all MSG Investigations.

Verification Definition Sheets

| Number | Title | Purpose | Method | Hazard Report(s) |
|---|---|---|---|---|
| IIT-ST-001 | STRUCTURAL - STRUCTURAL STRENGTH | ISS | A | |

MSFC-RQMT-2888 Paragraph Number(s), Title(s), and Method(s):
3.1.1.1.c Loads Requirements (A)

Requirement Summary:
The investigation must be able to withstand loads due to on-orbit accelerations as specified.

Detailed Descriptions of Requirements:

On-orbit loads shall be based on the 0.2G acceleration acting in any direction.

| Required Verification Data: | Data Submittal Dates: |
|---|---|
| 1. Data Cert that provides a summary of the analysis showing positive margins of safety. | 1. L-8 |

| Description of Reverification Requirements: | Reverification Method: | Hazard Report(s): |
|---|---|---|
| See section 5.3 for details. | | |

| Required Reverification Data: | Data Submittal Dates: |
|---|---|
| | |

Applicable Document(s):
SSP 57000, par. 3.1.1.3.B

| Number | Title | Purpose | Method | Hazard Report(s) |
|---|---|---|---|---|
| IIT-ST-002 | STRUCTURAL - CREW-APPLIED LOADS | ISS | A | |

MSFC-RQMT-2888 Paragraph Number(s), Title(s), and Method(s):
3.1.1.1.d Loads Requirements (A)

Requirement Summary:

This requirement addresses the ability of investigation hardware to withstand crew-applied loads for all operational modes.

Detailed Descriptions of Requirements:

Verify the capability of all investigation hardware that has a potential interface with the crew for operation, use, or impact (whether inadvertent or not) to withstand crew applied loads as specified in paragraph 3.1.1.1.d. Verify by stress analysis, using appropriate factors of safety, that all structures have positive margins of safety.

| Required Verification Data: | Data Submittal Dates: |
|---|---|
| 1. Data Cert providing a summary listing of all operational modes analyzed and showing positive margins of safety. | 1. L-8 |

| Description of Reverification Requirements: | Reverification Method: | Hazard Report(s): |
|---|---|---|
| See section 5.3 for details. | | |

| Required Reverification Data: | Data Submittal Dates: |
|---|---|
| | |

Applicable Document(s):

SSP 57000, par. 3.1.1.3.D

NSTS.1700.7

Verification Definition Sheets

| Number | Title | Purpose | Method | Hazard Report(s) |
|---|---|---|---|---|
| IIT-ST-003 | STRUCTURAL - ON-ORBIT DEPRESS/REPRESS | ISS | A | |

MSFC-RQMT-2888 Paragraph Number(s), Title(s), and Method(s):
3.1.1.2.b Additional Investigation Requirements (A)

Requirement Summary:

This requirement addresses the ability of the investigation to withstand pressure buildup during on-orbit depressurization/repressurization.

Detailed Descriptions of Requirements:

An analysis shall be conducted which shows the investigation's ability to withstand the MPLM depress rate of 890 Pa/sec (7.75 psi/min) and repress rate of 800 Pa/sec (6.96 psi/min).

| Required Verification Data: | Data Submittal Dates: |
|---|---|
| 1. Certificate of Compliance (COC). | 1. L-8 |

| Description of Reverification Requirements: | Reverification Method: | Hazard Report(s): |
|---|---|---|
| See section 5.3 for details. | | |

| Required Reverification Data: | Data Submittal Dates: |
|---|---|
| | |

Applicable Document(s):

SSP 57000, par. 3.1.1.4.B

| Number | Title | Purpose | Method | Hazard Report(s) |
|---|---|---|---|---|
| IIT-ST-005 | STRUCTURAL - HUMAN FACTOR STRENGTH REQUIREMENT | ISS | A or D | |

MSFC-RQMT-2888 Paragraph Number(s), Title(s), and Method(s):
3.10.1.a Strength Requirements (A or D)
3.10.1.b Strength Requirements (A or D)
3.10.1.c Strength Requirements (A or D)

Requirement Summary:

These requirements ensure that the crew will be physically capable of removing, replacing, controlling, operating, and maintaining the investigation hardware and equipment on-orbit.

Detailed Descriptions of Requirements:

A. Grip Strength - Verify by analysis or demonstration that the grip strength required to remove, replace, and operate the investigation equipment is less than 254 N (57 lbf).

B. Linear Forces - Verify by analysis or demonstration that the linear forces required to remove, replace, and operate the investigation equipment are less than the strength values for the 5$^{th}$ percentile female, defined as 50% of the strength values as specified in MSFC-RQMT-2888, Figure 25.

C. Torsional Forces - Verify by analysis or demonstration that the torsional forces required to remove, operate, and replace the investigation equipment are less than the strength values for the 5$^{th}$ percentile female, defined as 60% of the calculated 5$^{th}$ percentile male capability as specified in MSFC-RQMT-2888, Figure 26.

| Required Verification Data: | Data Submittal Dates: |
|---|---|
| 1. Certificate of Compliance (COC) | 1. L-8 |

| Description of Reverification Requirements: | Reverification Method: | Hazard Report(s): |
|---|---|---|
| See section 5.3 for details. | | |

| Required Reverification Data: | Data Submittal Dates: |
|---|---|
| | |

Applicable Document(s):

SSP 57000, par. 3.12.1 and Figures 3.12.1-1, 3.12.1-2, 3.12.1-3, 3.12.1-4, and 3.12.1-5

| Number | Title | Purpose | Method | Hazard Report(s) |
|---|---|---|---|---|
| IIT-ST-009 | STRUCTURAL - SECURING OF THREADED FASTENERS | ISS | A or I | |

MSFC-RQMT-2888 Paragraph Number(s), Title(s), and Method(s):
3.10.8.4.7 Locking Wires (I)

Requirement Summary:

Safety wires may not be used on fasteners.

Detailed Descriptions of Requirements:

Safety/lock wire is excluded as an acceptable method for securing of threaded fasteners.

Verification shall be considered successful when an inspection of threaded fasteners shows that safety/lock wires were not used.

| Required Verification Data: | Data Submittal Dates: |
|---|---|
| 1. Certificate of Compliance (COC). | 1. L-8 |

| Description of Reverification Requirements: | Reverification Method: | Hazard Report(s): |
|---|---|---|
| See section 5.3 for details. | | |

| Required Reverification Data: | Data Submittal Dates: |
|---|---|
| | |

Applicable Document(s):

MS 33540
SAE AS4536
SSP 52005, par. 5.6
SSP 57000, par. 3.12.9.9 and 3.1.1.5
NSTS 1700.7

| Number | Title | Purpose | Method | Hazard Report(s) |
|---|---|---|---|---|
| IIT-ME-001 | MECHANICAL – WEIGHT, CG & GEOMETRY | IIT | A&T | |

MSFC-RQMT-2888 Paragraph Number(s), Title(s), and Method(s):
3.1.1.2.a Additional Investigation Requirements (A&T)

Requirement Summary:

This requirement ensures that the weight of each investigation is within specified limits.

Detailed Descriptions of Requirements:

Determine the actual weight of investigation hardware items by analysis based on test data. Allowable tolerance of weighing equipment shall be ±0.05 lb. The actual mass of the investigation hardware items shall be no greater than the mass specified in the unique investigation ICD.

Determine the actual center of gravity (cg) in three orthogonal axes for hardware items greater than 30 lbs (13.6 kg) being stowed in the middeck and 50 lbs (22.7 kg) in the MPLM by test. Verification shall be considered successful when drawings are submitted to the IIT showing cg locations and origin. The accuracy shall be ± 0.5 in. (1.27 cm) for actual measured cg coordinate.

Determine by analysis the moment of inertia with respect to x, y, z axes about the cg (Ixx, Iyy, Izz) in kg-cm$^2$ and the product of inertia with respect to the x & y, y & z, x & z axes about the cg (Ixy, Iyz, Ixz) in kg-cm$^2$ for hardware items over 50 lbs (22.7 kg). They shall have an accuracy of ± 5%.

Verify that the hardware items size, shape and volume identified in the ICD are correct. Verification shall be considered successful when a COC is submitted stating that the size, shape and volume of the investigation hardware items in the ICD are correct.

Note: The IIT will determine that the investigation weight and any provided ancillary equipment meets the on-orbit requirement.

| Required Verification Data: | Data Submittal Dates: |
|---|---|
| 1. Data Cert that provides weight for launch and landing of the investigation hardware items. | 1. L-8 |
| 2. Drawings showing cg locations and origin. | 2. L-8 |
| 3. Analysis for the moment and product of inertia. | 3. L-8 |
| 4. Certificate of Compliance (COC). | 4. L-8 |

| Description of Reverification Requirements: | Reverification Method: | Hazard Report(s): |
|---|---|---|
| See section 5.3 for details. | | |

| Required Reverification Data: | Data Submittal Dates: |
|---|---|
| | |

Applicable Document(s):

SSP 57000, par. 3.1.1.4.A

Verification Definition Sheets

| Number | Title | Purpose | Method | Hazard Report(s) |
|---|---|---|---|---|
| IIT-ME-003 | MECHANICAL - PAYLOAD IN-FLIGHT MAINTENANCE | ISS | A | |

MSFC-RQMT-2888 Paragraph Number(s), Title(s), and Method(s):
3.10.9 Payload In-Flight Maintenance (A)

Requirement Summary:

This requirement ensures that investigation hardware can be maintained using Space Station-provided on-board tools.

Detailed Descriptions of Requirements:

Investigation hardware designed to be maintainable shall use Space Station-provided on-board tools. The verification shall be considered successful when an analysis of payload hardware and flight drawings confirm that the hardware can be maintained using Space Station-provided on-board tools, see section 3.10.9.

| Required Verification Data: | Data Submittal Dates: |
|---|---|
| 1. Certificate of Compliance (COC). | 1. L-8 |

| Description of Reverification Requirements: | Reverification Method: | Hazard Report(s): |
|---|---|---|
| See section 5.3 for details. | | |

| Required Reverification Data: | Data Submittal Dates: |
|---|---|
| | |

Applicable Document(s):

SSP 57000, par. 3.12.10
SSP 57020, (Pressurized Payloads Accommodations Handbook (TBD))

| Number | Title | Purpose | Method | Hazard Report(s) |
|---|---|---|---|---|
| IIT-ME-007 | MECHANICAL - CLOSURES AND COVERS | ISS | A&I | |

MSFC-RQMT-2888 Paragraph Number(s), Title(s), and Method(s):
3.10.2.1.1 Closures and Covers (I)
3.10.8.4.1 Holes (A&I)

Requirement Summary:

Closures and covers are required for areas that are not designed for routine cleaning.

Detailed Descriptions of Requirements:

A. Closures or covers shall be provided for any area of the investigation equipment that is not designed for routine cleaning. Verification shall be performed by inspection of the investigation drawings to verify the design and by inspection of the flight hardware to confirm compliance with the requirement. (MSFC-RQMT-2888 Paragraph, 3.10.2.1.1)

B. Covers shall be provided for holes that are round or slotted in the range of 10.0 to 25.0 mm (0.4 to 1.0 in.) (MSFC-RQMT-2888 Paragraph 3.10.8.4.1). An analysis shall be performed using data from drawings to identify the applicable holes. Verification shall be performed by inspection of the design drawings to ensure that either proper hole sizes have been used or that all applicable holes are covered or guarded.

| Required Verification Data: | Data Submittal Dates: |
|---|---|
| 1. Certificate of Compliance (COC). | 1. L-8 |

| Description of Reverification Requirements: | Reverification Method: | Hazard Report(s): |
|---|---|---|
| | A&I | |

See section 5.3 for details.

| Required Reverification Data: | Data Submittal Dates: |
|---|---|
| | |

Applicable Document(s):

SSP 57000, par. 3.12.3.1.1, 3.12.4.2.8.1, 3.12.4.2.8.2, and 3.12.9.3

NSTS 1700.7

Verification Definition Sheets

| Number | Title | Purpose | Method | Hazard Report(s) |
|---|---|---|---|---|
| IIT-ME-008 | MECHANICAL - BUILT-IN CONTROLS | ISS | I & D or A | |

MSFC-RQMT-2888 Paragraph Number(s), Title(s), and Method(s):
3.10.2.1.2.a Built-In Controls (I)
3.10.2.1.2.b Built-In Controls (A or D)

Requirement Summary:

Containers of liquids or particulate matter must have built-in methods of capture control, and the capture mechanisms/elements should not disperse their trapped materials while they are being replaced or cleaned. Also, payload-provided cleaning materials must meet specific requirements.

Detailed Descriptions of Requirements:

A. Payload containers of liquids or particulate matter shall have built-in equipment/methods for control of vaporization, material overflow, or spills. (MSFC-RQMT-2888, Paragraph 3.10.2.1.2.a) Verification shall be performed by inspection of the drawings to verify the design and by inspection of the flight hardware to confirm compliance with the requirement.

B. Capture elements, including grids, screens, or filter surfaces shall be accessible for replacement or cleaning without dispersion of the trapped materials. (MSFC-RQMT-2888, Paragraph 3.10.2.1.2.b). The verification shall be considered successful when demonstration or analysis shows that the crew can access the flight hardware capture elements for cleaning or replacement without dispersion of trapped material.

| Required Verification Data: | Data Submittal Dates: |
|---|---|
| 1. Certificate of Compliance (COC). | 1. L-8 |

| Description of Reverification Requirements: | Reverification Method: | Hazard Report(s): |
|---|---|---|
| See section 5.3 for details. | | |

| Required Reverification Data: | Data Submittal Dates: |
|---|---|
| | |

Applicable Document(s):
SSP 57000, par. 3.12.3.1.2
NSTS 1700.7

| Number | Title | Purpose | Method | Hazard Report(s) |
|---|---|---|---|---|
| IIT-ME-009 | MECHANICAL - ONE-HANDED CLEANING OPERATIONS | ISS | D | |

MSFC-RQMT-2888 Paragraph Number(s), Title(s), and Method(s):
3.10.2.1.3 One-Handed Operation (D)

Requirement Summary:

Investigation cleaning equipment and supplies must be designed for one-handed operation or use.

Detailed Descriptions of Requirements:

Verify by demonstration that investigation cleaning equipment and supplies can be operated using only one hand, which does not preclude the use of either hand.

| Required Verification Data: | Data Submittal Dates: |
|---|---|
| 1. Certificate of Compliance (COC). | 1. L-8 |

| Description of Reverification Requirements: | Reverification Method: | Hazard Report(s): |
|---|---|---|
| See section 5.3 for details. | | |

| Required Reverification Data: | Data Submittal Dates: |
|---|---|
| | |

Applicable Document(s):
SSP 57000, par. 3.12.3.1.5

Verification Definition Sheets

| Number | Title | Purpose | Method | Hazard Report(s) |
|---|---|---|---|---|
| IIT-ME-011 | MECHANICAL - EQUIPMENT MOUNTING | ISS | A or D | |

MSFC-RQMT-2888 Paragraph Number(s), Title(s), and Method(s):
3.10.3.1 Equipment Mounting (A or D)

Requirement Summary:

Equipment must be labeled or marked to protect against improper installation.

Detailed Descriptions of Requirements:

Equipment mounting used during nominal operations and planned maintenance shall be verified by analysis or demonstration. The verification shall be considered successful when the analysis or demonstration shows that the payload hardware used during nominal operations and planned maintenance is designed, labeled, or marked to protect against improper installation.

NOTE: The demonstration can be closed during physical or functional testing using either the EU or GU.

| Required Verification Data: | Data Submittal Dates: |
|---|---|
| 1. Certificate of Compliance (COC), stating no changes have been made to the hardware since testing was performed. | 1. L-8 |

| Description of Reverification Requirements: | Reverification Method: | Hazard Report(s): |
|---|---|---|
| See section 5.3 for details. | | |

| Required Reverification Data: | Data Submittal Dates: |
|---|---|
| | |

Applicable Document(s):

SSP 57000, par. 3.12.4.2.1

| Number | Title | Purpose | Method | Hazard Report(s) |
|---|---|---|---|---|
| IIT-ME-016 | MECHANICAL - UNIQUE TOOLS | ISS | A | |

MSFC-RQMT-2888 Paragraph Number(s), Title(s), and Method(s):
3.10.3.2 Unique Tools (A)

Requirement Summary:

Investigation-provided unique tools must comply with MSFC-RQMT-2888 requirements.

Detailed Descriptions of Requirements:

Investigation-provided unique tools and power tools shall meet the requirements in MSFC-RQMT-2888 paragraph 3.10.3.2. Verification shall be considered successful when an analysis of the payload flight hardware drawings for investigation-provided unique tools shows that the tool requirements are met based on the identified requirements in the Investigation Verification Matrix.

| Required Verification Data: | Data Submittal Dates: |
|---|---|
| 1. Certificate of Compliance (COC). | 1. L-8 |

| Description of Reverification Requirements: | Reverification Method: | Hazard Report(s): |
|---|---|---|
| See section 5.3 for details. | | |

| Required Reverification Data: | Data Submittal Dates: |
|---|---|
| | |

Applicable Document(s):

SSP 50005, par. 11.2.3
SSP 57000, par. 3.12.4.2.8.4

| Number | Title | Purpose | Method | Hazard Report(s) |
|---|---|---|---|---|
| IIT-ME-017 | MECHANICAL-CONNECTOR MATING/DEMATING | ISS | A or A&D | |

MSFC-RQMT-2888 Paragraph Number(s), Title(s), and Method(s):
3.10.3.3.1 One-Handed Operation (A or D)
3.10.3.3.3 Ease of Disconnect (A)
3.10.3.3.4 Self Locking (A)

Requirement Summary:

These requirements ensure that fluid and electrical connectors can be operated easily by crewmembers on-orbit. Fluid connectors must be designed for one-handed operation. The crew should be able to disconnect electrical connector plugs by no more than two turns, and internal connector plugs must provide a self-locking safety catch.

Detailed Descriptions of Requirements:

A. Fluid Connectors
All ORU connectors, whether operated by hand or tool, shall be designed so that they can be mated/demated using one hand. Connector design shall not preclude the use of either the right or the left hand. (MSFC-RQMT-2888, Paragraph 3.10.3.3.1) Verification shall be considered successful when analysis or demonstration shows that all ORU connectors (flight hardware or hardware that replicates the flight hardware configuration), can be mated/demated using only one hand, which does not preclude the use of either hand.

B. Electrical Connectors
i. All ORU connectors, whether operated by hand or tool, shall be designed so that they can be mated/demated using one hand. Connector design shall not preclude the use of either hand. (MSFC-RQMT-2888, Paragraph 3.10.3.3.1) Verification shall be considered successful when analysis or demonstration shows that all ORU connectors can be mated/demated using only one hand, which does not preclude the use of either hand.
ii. Electrical connectors which are mated/demated during nominal operations shall require no more than two turns to disconnect (MSFC-RQMT-2888, Paragraph 3.10.3.3.3). Ease of disconnect shall be verified by analysis. Verification shall be considered successful when an analysis shows that electrical connectors which are mated/demated during nominal operations require no more than two turns to disconnect.

Payload electrical connectors shall provide a self-locking feature. (MSFC-RQMT-2888, Paragraph 3.10.3.3.4) Verification shall be considered successful when an analysis of payload flight hardware drawings shows payload electrical connectors are provided with a self-locking feature.

NOTE: Demonstration can be closed during physical or function testing using either the GU or EU.

| Required Verification Data: | Data Submittal Dates: |
|---|---|
| 1. Certificate of Compliance (COC). | 1. L-8 |

| Description of Reverification Requirements: | Reverification Method: | Hazard Report(s): |
|---|---|---|
| See section 5.3 for details. | | |

| Required Reverification Data: | Data Submittal Dates: |
|---|---|
| | |

Applicable Document(s):

SSP 57000, par. 3.12.4.3.1, 3.12.4.3.3, and 3.12.4.3.5

NSTS 1700.7

| Number | Title | Purpose | Method | Hazard Report(s) |
|---|---|---|---|---|
| IIT-ME-018 | MECHANICAL - CONNECTOR ARRANGEMENT AND ACCESSIBILITY | ISS | A or D & I | |

MSFC-RQMT-2888 Paragraph Number(s), Title(s), and Method(s):

3.10.3.3.2 Accessibility (A or D)
3.10.3.3.5 Connector Arrangement (I)

Requirement Summary:
Connectors must be accessible, and they should be easy to disconnect, or reconnect without causing damage to them.

Detailed Descriptions of Requirements:

A. Accessibility shall be verified by analysis or demonstration. Verification shall be considered successful when an analysis of the payload flight hardware drawings or demonstration of the payload flight hardware shows that it is possible to mate/demate individual connectors without having to remove or mate/demate other connectors.

B. Electrical connectors and cable installations shall permit disconnection and reconnection without damage to wiring connectors. Verification shall be considered successful when an analysis of the payload hardware drawings shows that it is possible to disconnect and reconnect electrical connectors and cable installations without damage to wiring connectors.

C. Space between connectors and adjacent obstructions shall be a minimum of 25 mm (1 inch) for access. Verification shall be considered successful when an inspection of the space between connectors and adjacent obstructions shows compliance with the requirement.

D. Connectors in a single row or staggered rows which are removed sequentially by the crew shall provide a minimum of 25 mm (1 inch) of clearance from other connectors and/or adjacent obstructions for 270 degrees of sweep around each connector beginning at the start of its removal/replacement sequence. Verification shall be considered successful when an inspection of connectors in a single row or staggered rows shows compliance with the requirements.

NOTE: Demonstration can be closed during physical or function testing using either the GU or EU.

| Required Verification Data: | Data Submittal Dates: |
|---|---|
| 1. Certificate of Compliance (COC). | 1. L-8 |

| Description of Reverification Requirements: | Reverification Method: | Hazard Report(s): |
|---|---|---|
| See section 5.3 for details. | | |

| Required Reverification Data: | Data Submittal Dates: |
|---|---|
| | |

Applicable Document(s):

SSP 57000, par. 3.12.4.3.2 and 3.12.4.3.6

Verification Definition Sheets

| Number | Title | Purpose | Method | Hazard Report(s) |
|---|---|---|---|---|
| ITT-ME-019 | MECHANICAL - CONNECTOR PROTECTION AND SHAPE | ISS | A & DorI | |

MSFC-RQMT-2888 Paragraph Number(s), Title(s), and Method(s):
3.10.3.3.7 Connector Protection (A)
3.10.3.3.8 Connector Shape (A)
3.10.8.2 Mismatched (D or I)

Requirement Summary:

Investigation connectors should be designed to prevent inadvertent reversing or mismatching of electrical connections. They should also have sufficient mechanical protection to prevent crewmember contact with exposed electrical contacts, and physical damage/contamination protection should be provided for demated connectors.

Detailed Descriptions of Requirements:

Connectors

i. Physical - Protection shall be provided for all demated connectors against physical damage and contamination. (MSFC-RQMT-2888 Paragraph 3.10.3.3.7). Verification shall be considered successful when an analysis shows that protection is provided for all demated connectors against physical damage and contamination.

ii.Mismating - The design of investigation connectors shall be verified by analysis and demonstration or inspection. The demonstration shall be performed on the investigation connectors. The analysis and inspection shall be performed on the drawings. The verification shall be considered successful when the analysis and demonstration or inspection shows that the connectors are unique to its appropriate connection, thereby preventing mismatching. See MSFC-RQMT-2888 Paragraph 3.10.3.3.8 and 3.10.8.2.

NOTE: Demonstration can be closed during physical or function testing using either the GU or EU.

| Required Verification Data: | Data Submittal Dates: |
|---|---|
| 1. Certificate of Compliance (COC). | 1. L-8 |

| Description of Reverification Requirements: | Reverification Method: | Hazard Report(s): |
|---|---|---|
| See section 5.3 for details. | | |

| Required Reverification Data: | Data Submittal Dates: |
|---|---|
| | |

Applicable Document(s):

SSP 57000, par. 3.12.4.3.8, 3.12.4.3.9, and 3.12.9.1.1

NSTS 1700.7

| Number | Title | Purpose | Method | Hazard Report(s) |
|---|---|---|---|---|
| IIT-ME-020 | MECHANICAL - ALIGNMENT, CODING, AND ORIENTATION | ISS | A&I | |

MSFC-RQMT-2888 Paragraph Number(s), Title(s), and Method(s):
3.10.3.3.13 Alignment Marks or Guide Pins (I)
3.10.3.3.12 Orientation (A)
3.10.3.3.10 Coding (I)

Requirement Summary:

Parts that are to be mated on-orbit must have alignment marks with both halves properly coded, and grouped plugs must be oriented so that aligning pins are in the same relative position.

Detailed Descriptions of Requirements:

A. Alignment marks, guide pins, or mating parts shall be verified by inspection. The inspection shall be performed by examining the mating hardware for alignment marks or guide pins in a visible location during mating. Verification shall be considered successful when an inspection shows that the alignment marks or guide pins are applied to mating parts and consist of a straight or curved line to a width and length sufficient to allow accurate alignment. Guide pins shall be verified by inspection of the drawings or the hardware. The verification shall be considered successful when the guide pins are shown to extend beyond the plug's electrical pins to ensure that guide is obtained before the electrical pins engage.

B. Both halves of mating connectors shall display a code or identifier which is unique to that connection. The labels or codes on connectors shall be located so that they are visible when connected or disconnected. (MSFC-RQMT-2888, Paragraph 3.10.3.3.10) Verification shall be considered successful when an inspection shows that both halves of mating connectors display a code or identifier which is unique to that connection.

C. Grouped plugs and receptacles shall be oriented so that the aligning pins or equivalent devices are in the same relative position. (MSFC-RQMT-2888, Paragraph 3.10.3.3.12) Verification shall be considered successful when an analysis of the payload flight hardware drawings shows that grouped plugs and receptacles are oriented so that the aligning pins or equivalent devices are in the same relative position.

| Required Verification Data: | Data Submittal Dates: |
|---|---|
| 1. Certificate of Compliance (COC). | 1. L-8 |

| Description of Reverification Requirements: | Reverification Method: | Hazard Report(s): |
|---|---|---|
| See section 5.3 for details. | A&I | |

| Required Reverification Data: | Data Submittal Dates: |
|---|---|
| | |

Applicable Document(s):

SSP 57000, par. 3.12.4.3.11, 3.12.4.3.12, and 3.12.4.3.14

Verification Definition Sheets

| Number | Title | Purpose | Method | Hazard Report(s) |
|---|---|---|---|---|
| IIT-ME-023 | MECHANICAL - ENGAGEMENT STATUS INDICATION | ISS | D or I | |

MSFC-RQMT-2888 Paragraph Number(s), Title(s), and Method(s):
3.10.3.4.1 Non-Threaded Fastener Status Indication (D or I)

Requirement Summary:

Non-Threaded fasteners must provide an indication that they are correctly engaged.

Detailed Descriptions of Requirements:

Non-threaded fasteners status indication shall be verified by demonstration or inspection. Verification shall be considered successful when the demonstration or inspection shows that an indication of correct engagement (hooking, latch fastening, or proper positioning of interfacing parts) of non-threaded fasteners shall be provided.

| Required Verification Data: | Data Submittal Dates: |
|---|---|
| 1. Certificate of Compliance (COC). | 1. L-8 |

| Description of Reverification Requirements: | Reverification Method: | Hazard Report(s): |
|---|---|---|
| See section 5.3 for details. | | |

| Required Reverification Data: | Data Submittal Dates: |
|---|---|
| | |

Applicable Document(s):

SSP 57000, par. 3.12.4.4.1

| Number | Title | Purpose | Method | Hazard Report(s) |
|---|---|---|---|---|
| IIT-ME-024 | MECHANICAL - MOUNTING BOLT/FASTENER SPACING AND TOOL CLEARANCE | ISS | I | |

MSFC-RQMT-2888 Paragraph Number(s), Title(s), and Method(s):
3.10.3.4.2 Mounting Bolt/Fastener Spacing (I)
3.10.3.4.12 Access Holes (I)

Requirement Summary:

Spacing around fasteners must allow hand or tool access, and holes that fasteners pass through should not require precise alignment of the fastener. Adequate clearance for finger access must be provided.

Detailed Descriptions of Requirements:

A. Mounting bolts and fasteners shall be spaced the required distance from other surfaces as specified in MSFC-RQMT-2888, Paragraph 3.10.3.4.2. Verification shall be considered successful when an inspection of the hardware shows that the required distances have been met.

B. Covers or shields through which mounting fasteners must pass shall have holes that allow passage of the fastener (and hand or necessary tool if either is required) without precise alignment. (MSFC-RQMT-2888, Paragraph 3.10.3.4.12) Verification shall be considered successful when an inspection shows that covers or shields through which mounting fasteners must pass for attachment to the basic chassis of the unit have holes for passage of the fastener without precise alignment.

| Required Verification Data: | Data Submittal Dates: |
|---|---|
| 1. Certificate of Compliance (COC). | 1. L-8 |

| Description of Reverification Requirements: | Reverification Method: | Hazard Report(s): |
|---|---|---|
| See section 5.3 for details. | | |

| Required Reverification Data: | Data Submittal Dates: |
|---|---|
| | |

Applicable Document(s):

SSP 57000, par. 3.12.4.4.2, 3.12.4.4.13, and 3.12.4.4.14

Verification Definition Sheets

| Number | Title | Purpose | Method | Hazard Report(s) |
|---|---|---|---|---|
| IIT-ME-025 | MECHANICAL - MULTIPLE FASTENERS | ISS | I | |

MSFC-RQMT-2888 Paragraph Number(s), Title(s), and Method(s):
3.10.3.4.3 Multiple Fasteners (I)

Requirement Summary:

When several fasteners are used on one item, they should all be of the same type (excluding length), and the design should prohibit them from being assembled incorrectly.

Detailed Descriptions of Requirements:

Multiple fasteners shall be verified by inspection. Verification shall be considered successful when an inspection shows that when several fasteners are used on one item they are all of identical type (excluding length).

| Required Verification Data: | Data Submittal Dates: |
|---|---|
| 1. Certificate of Compliance (COC). | 1. L-8 |

| Description of Reverification Requirements: | Reverification Method: | Hazard Report(s): |
|---|---|---|
| See section 5.3 for details. | | |

| Required Reverification Data: | Data Submittal Dates: |
|---|---|
| | |

Applicable Document(s):

SSP 57000, par. 3.12.4.4.4

| Number | Title | Purpose | Method | Hazard Report(s) |
|---|---|---|---|---|
| IIT-ME-026 | MECHANICAL - FASTENERS | ISS | A&I | |

MSFC-RQMT-2888 Paragraph Number(s), Title(s), and Method(s):

3.10.8.4.3 Screws and Bolts (A&I)
3.10.3.4.4 Captive Fasteners (A)
3.10.3.4.5 Quick Release Fasteners (I)
3.10.3.4.6 Threaded Fasteners (I)
3.10.3.4.8 Winghead Fasteners (I)

Requirement Summary:

These requirements ensure that fasteners in the investigation hardware comply with specified operational requirements.

Detailed Descriptions of Requirements:

A. All fasteners shall be captive when disengaged. (MSFC-RQMT-2888, Paragraph 3.10.3.4.4) Verification shall be considered successful when an analysis shows that fasteners that are planned to be installed and/or removed on-orbit are captive when disengaged.

B. Quick Release Fasteners shall:

   i. Require a maximum of one complete turn to operate (quarter-turn fasteners are preferred). (MSFC-RQMT-2888, Paragraph 3.10.3.4.5) Verification shall be considered successful when an inspection shows that fasteners require a maximum of one complete turn to operate.

   ii. Be positive-locking in the open and closed positions (MSFC-RQMT-2888, Paragraph 3.10.3.4.5). Verification shall be considered successful when an inspection shows that fasteners are positive-locking in open and closed positions.

C. Threaded fasteners shall have only right-hand threads (MSFC-RQMT-2888, Paragraph 3.10.3.4.6). Verification shall be considered successful when an inspection shows that threaded fasteners have right-handed threads per the hardware or drawings.

D. Winghead fasteners shall fold down and be retained flush with surfaces (MSFC-RQMT-2888, Paragraph 3.10.3.4.8). Verification shall be considered successful when an inspection shows that winghead fasteners fold and are retained flush with surfaces.

E. Threaded ends of screws and bolts accessible by the crew and extending more than 3.0 mm (0.12 in.) shall be capped to protect against sharp threads. (MSFC-RQMT-2888, paragraph 3.10.8.4.3) To satisfy the verification an analysis shall be performed using data from drawings, integration documentation, and operational procedures to identify screws and bolts that exceed the length specified in the requirements and the required use of guards or covers due to location in crewmember translation paths within the MSG work volume. The verification shall be considered successful when a drawing inspection shows that screws and bolts which exceed the specified length have been properly covered, or guarded.

| Required Verification Data: | Data Submittal Dates: |
|---|---|
| 1. Certificate of Compliance (COC). | 1. L-8 |

continued on next page

| Number | Title | Purpose | Method | Hazard Report(s) |
|---|---|---|---|---|
| IIT-ME-026 | MECHANICAL - FASTENERS | ISS | A&I | |

continued from previous page

| Description of Reverification Requirements: | Reverification Method: | Hazard Report(s): |
|---|---|---|
| See section 5.3 for details. | | |

| Required Reverification Data: | Data Submittal Dates: |
|---|---|
| | |

Applicable Document(s):

SSP 52005, section 5.6
SSP 57000, par. 3.12.4.4.5, 3.12.4.4.6, 3.12.4.4.7, 3.12.4.4.9, and 3.12.9.5
NSTS 1700.7

| Number | Title | Purpose | Method | Hazard Report(s) |
|---|---|---|---|---|
| IIT-ME-027 | MECHANICAL - LATCHES | ISS | I | |

MSFC-RQMT-2888 Paragraph Number(s), Title(s), and Method(s):

3.10.5.2.a Stowage and Equipment Containers (I) 3.10.3.4.7 Over Center Latches (I)
3.10.5.2.b Stowage and Equipment Containers (I)
3.10.8.4.2 Latches (I)

Requirement Summary:

These requirements ensure that latches and associated handles/operating mechanisms comply with specified operational requirements.

Detailed Descriptions of Requirements:

A. Over center latches shall have the following design features:

i. Nonself-Latching - Over center latches shall include a provision to prevent undesired latch element realignment, interface, or re-engagement. (MSFC-RQMT-2888, Paragraph 3.10.3.4.7). Verification shall be considered successful when an inspection shows that there is a provision to protect against undesired latch element realignment, interface, or re-engagement.

ii. Latch Lock - Latch catches shall have locking features. (MSFC-RQMT-2888, Paragraph 3.10.3.4.7). Verification shall be considered successful when an inspection shows that latch catches have locking features.

iii. Latch Handles - If the latch has a handle, the latch handle and latch release shall be operable by one hand. (MSFC-RQMT-2888, Paragraph 3.10.3.4.7). Verification shall be considered successful when an inspection shows that the latch handle and latch release are operable by one hand.

B. Latches on containers shall include the following design features:

i. All latches, handles, and operating mechanisms shall be designed to be latched/unlatched and opened/closed with one hand by the 95$^{th}$ percentile American male to the 5th percentile female. (MSFC-RQMT-2888 Paragraph 3.10.5.2.a). Verification shall be considered successful when an inspection of the payload flight hardware drawings shows that all latches, handles, and operating mechanisms are designed to be latched/unlatched and opened/closed with one hand by the 95$^{th}$ percentile American male and accommodate the 5th percentile female.

ii. The design of latches shall be such that their status (locked/unlocked) can be determined through visual inspection. (MSFC-RQMT-2888 Paragraph 3.10.5.2.b). Verification shall be considered successful when an inspection shows that the status of latches can be determined through visual inspection.

B. Latches that pivot, retract, or flex so that a gap of less than 35 mm (1.4 in.) exists shall be designed to prevent entrapment of a crewmembers appendage. (MSFC-RQMT-2888 paragraph 3.10.8.4.2). Verification shall be considered successful when an inspection shows that all latches and similar devices have been properly covered, or guarded and designed to prevent entrapment of crewmember appendages.

| Required Verification Data: | Data Submittal Dates: |
|---|---|
| 1. Certificate of Compliance (COC). | 1. L-8 |

continued on next page

| Number | Title | Purpose | Method | Hazard Report(s) |
|---|---|---|---|---|
| IIT-ME-027 | MECHANICAL - LATCHES | ISS | I | |

continued from previous page

| Description of Reverification Requirements: | Reverification Method: | Hazard Report(s): |
|---|---|---|
| See section 5.3 for details. | | |

| Required Reverification Data: | Data Submittal Dates: |
|---|---|
| | |

Applicable Document(s):

SSP 57000, par. 3.12.4.4.8, 3.12.6.2, and 3.12.9.4

NSTS 1700.7

| Number | Title | Purpose | Method | Hazard Report(s) |
|---|---|---|---|---|
| IIT-ME-028 | MECHANICAL - FASTENER HEAD TYPE | ISS | I | |

MSFC-RQMT-2888 Paragraph Number(s), Title(s), and Method(s):
3.10.3.4.9 Fastener Head Type (I)

Requirement Summary:

These requirements ensure that fastener head designs comply with operational requirements.

Detailed Descriptions of Requirements:

A. Hex type external or internal grip or combination-head fasteners type shall be verified by inspection. The inspection shall be of the drawings and parts list or of the flight hardware. Verification shall be considered successful when an inspection shows that the hex type external or internal grip or combination head fasteners are used for all on-orbit crew-actuated equipment.

B. Flush or oval head internal hex grip fasteners shall be used only where smooth surfaces are required. The inspection shall be of the flight hardware or the drawings and parts list. Verification shall be considered successful when an inspection shows that, when a smooth surface is required, only flush or oval head internal hex grip fastener head types are used.

C. The verification that straight-slot fasteners are not used to carry launch loads for hard mounted equipment shall be by inspection. The inspection shall be of the flight hardware or the drawings and parts list. The verification shall be considered successful when an inspection shows that straight-slot fasteners are not used to carry launch loads for hard mounted equipment.

| Required Verification Data: | Data Submittal Dates: |
|---|---|
| 1. Certificate of Compliance (COC). | 1. L-8 |

| Description of Reverification Requirements: | Reverification Method: | Hazard Report(s): |
|---|---|---|
| See section 5.3 for details. | | |

| Required Reverification Data: | Data Submittal Dates: |
|---|---|
| | |

Applicable Document(s):

SSP 57000, par. 3.12.4.4.11

Verification Definition Sheets

| Number | Title | Purpose | Method | Hazard Report(s) |
|---|---|---|---|---|
| IIT-ME-029 | MECHANICAL - ONE-HANDED FASTENER ACTUATION | ISS | A or D | |

MSFC-RQMT-2888 Paragraph Number(s), Title(s), and Method(s):
3.10.3.4.10 One-Handed Actuation (A or D)

Requirement Summary:

One-handed operation (either left or right hand) should be sufficient to actuate fasteners.

Detailed Descriptions of Requirements:

One-handed actuation shall be verified by analysis or demonstration. The analysis or demonstration shall be performed on the drawings, flight hardware, or hardware which replicates the flight hardware configuration. Verification shall be considered successful when the analysis demonstration shows that fasteners planned to be removed or installed on-orbit can be mated/demated using only one hand, which does not preclude the use of either hand.

NOTE: Demonstration can be closed during physical or function testing using either the GU or EU.

| Required Verification Data: | Data Submittal Dates: |
|---|---|
| 1. Certificate of Compliance (COC). | 1. L-8 |

| Description of Reverification Requirements: | Reverification Method: | Hazard Report(s): |
|---|---|---|
| See section 5.3 for details. | | |

| Required Reverification Data: | Data Submittal Dates: |
|---|---|
| | |

Applicable Document(s):

SSP 57000, par. 3.12.4.4.12

| Number | Title | Purpose | Method | Hazard Report(s) |
|---|---|---|---|---|
| IIT-ME-030 | MECHANICAL - CONTROLS SPACING DESIGN | ISS | I | |

MSFC-RQMT-2888 Paragraph Number(s), Title(s), and Method(s):
3.10.4.1 Controls Spacing Design Requirements (I)
3.10.4.3 Noninterference (I)
3.10.4.4 Barrier Guards (I)

Requirement Summary:

Controls, barrier guards, and other protection devices must comply with minimum spacing requirements.

Detailed Descriptions of Requirements:

A. All spacing between controls and adjacent obstructions shall meet the minimum requirements provided in accordance with MSFC-RQMT-2888, Paragraph 3.10.4.1 for ungloved operation. Verification shall be considered successful when an inspection shows that the spacing between controls and adjacent obstructions is as specified.

B. Payloads shall provide protection devices that do not cover or obscure other displays or controls. (MSFC-RQMT-2888, Paragraph 3.10.4.3) Verification shall be considered successful when an inspection shows that protection devices do not cover or obscure other displays and controls.

C. Barrier guard spacing shall adhere to the requirements for toggle switches, rotary switches, and thumbwheels as specified in MSFC-RQMT-2888, Paragraph 3.10.4.4 for ungloved operation. Verification shall be considered successful when an inspection shows that the barrier guard spacing is as specified.

| Required Verification Data: | Data Submittal Dates: |
|---|---|
| 1. Certificate of Compliance (COC). | 1. L-8 |

| Description of Reverification Requirements: | Reverification Method: | Hazard Report(s): |
|---|---|---|
| See section 5.3 for details. | | |

| Required Reverification Data: | Data Submittal Dates: |
|---|---|
| | |

Applicable Document(s):

SSP 57000, par. 3.12.5.1, 3.12.5.2.2, and 3.12.5.2.4

Verification Definition Sheets

| Number | Title | Purpose | Method | Hazard Report(s) |
|---|---|---|---|---|
| IIT-ME-031 | MECHANICAL - ACCIDENTAL ACTUATION PROTECTION | ISS | I | |

MSFC-RQMT-2888 Paragraph Number(s), Title(s), and Method(s):

3.10.4.2 Protective Methods (I)
3.10.4.5 Recessed Switch Protection (I)
3.10.4.7 Hidden Controls (I)
3.10.4.8 Hand Controllers (I)

Requirement Summary:

These requirements protect against accidental actuation of switches or other control devices.

Detailed Descriptions of Requirements:

A. Payloads shall provide protection for controls to prevent accidental actuation including displays and controls used for maintenance and adjustment which could disrupt nominal operations if actuated. Suggested protective methods/requirements are in accordance with MSFC-RQMT-2888, Paragraph 3.10.4.2. Verification shall be considered successful when an inspection shows that the spacing between controls and adjacent obstructions is as specified.

B. When a barrier guard is not used to prevent accidental actuation, rotary switches that control functions shall be recessed as specified in MSFC-RQMT-2888, Paragraph 3.10.4.5. Verification shall be considered successful when an inspection shows that rotary switches that control critical functions, and do not have barrier guards, are addressed as specified.

C. Controls that cannot be directly viewed will be avoided. If present, hidden controls shall be guarded to prevent inadvertent actuation in accordance with MSFC-RQMT-2888, Paragraph 3.10.4.7. Verification shall be considered successful when an inspection shows that hidden controls are guarded to protect against inadvertent actuation.

D. Hand Controllers shall have a separate on/off control to prevent inadvertent actuation when the controller is not in use as specified in MSFC-RQMT-2888, Paragraph 3.10.4.8. Verification shall be considered successful when an inspection shows that hand controllers have a separate on/off control.

| Required Verification Data: | Data Submittal Dates: |
|---|---|
| 1. Certificate of Compliance (COC). | 1. L-8 |

| Description of Reverification Requirements: | Reverification Method: | Hazard Report(s): |
|---|---|---|
| See section 5.3 for details. | | |

| Required Reverification Data: | Data Submittal Dates: |
|---|---|
| | |

Applicable Document(s):

SSP 57000, par. 3.12.5.2.1, 3.12.5.2.5, 3.12.5.2.8, and 3.12.5.2.9

| Number | Title | Purpose | Method | Hazard Report(s) |
|---|---|---|---|---|
| IIT-ME-032 | MECHANICAL - POSITION INDICATION | ISS | I | |

MSFC-RQMT-2888 Paragraph Number(s), Title(s), and Method(s):
3.10.4.6 Position Indication (I)

Requirement Summary:

The position of switches or other control devices should be evident without requiring removal of protective covers.

Detailed Descriptions of Requirements:

When switch protective covers are used, control positions shall be evident without requiring cover removal. Verification shall be considered successful when an inspection shows that the control position is evident without removal of the protective cover.

| Required Verification Data: | Data Submittal Dates: |
|---|---|
| 1. Certificate of Compliance (COC). | 1. L-8 |

| Description of Reverification Requirements: | Reverification Method: | Hazard Report(s): |
|---|---|---|
| See section 5.3 for details. | | |

| Required Reverification Data: | Data Submittal Dates: |
|---|---|
| | |

Applicable Document(s):

SSP 57000, par. 3.12.5.2.7

Verification Definition Sheets

| Number | Title | Purpose | Method | Hazard Report(s) |
|---|---|---|---|---|
| IIT-ME-033 | MECHANICAL - VALVE CONTROLS | ISS | I | |

MSFC-RQMT-2888 Paragraph Number(s), Title(s), and Method(s):

3.10.4.9.a Valve Controls (I)
3.10.4.9.b Valve Controls (I)
3.10.4.9.c Valve Controls (I)
3.10.4.9.d Valve Controls (I)
3.10.4.9.e Valve Controls (I)

Requirement Summary:

Valve controls need different types of handles, depending on the amount of torque needed to operate them. Rotary valves should be threaded such that they open in the counter-clockwise direction, and the handles should be sized for easy manipulation.

Detailed Descriptions of Requirements:

A. Low-torque valve controls shall be verified by inspection. Verification shall be considered successful when an inspection of the investigation flight hardware drawings of valves classified as low-torque (i.e., requiring 1N-M (10 in-lb.) or less for operation) are equipped with a central pivot type handle.

B. Intermediate-torque valve controls shall be verified by inspection. Verification shall be considered successful when an inspection of the investigation flight hardware drawings of valves classified as intermediate-torque (i.e., requiring between 1 and 2 N-M (10 and 20 in-lbs) for operation) are equipped with a central pivot or lever type handle.

C. High-torque valve controls shall be verified by inspection. Verification shall be considered successful when an inspection of the investigation flight hardware drawings of valves classified as high-torque (i.e., requiring between 2 N-M (20 in-lbs) or more for operation) are equipped with lever-type handles.

D. Valve handle dimensions shall meet the requirements as specified in MSFC-RQMT-2888, Paragraph 3.10.4.9.d. Verification shall be considered successful when an inspection of the payload flight hardware drawings shows that valve handle dimensions meet the requirements.

E. Rotary valve controls shall be verified by inspection. Verification shall be considered successful when an inspection shows that rotary valve controls open the valve with a counter-clockwise motion.

| Required Verification Data: | Data Submittal Dates: |
|---|---|
| 1. Certificate of Compliance (COC). | 1. L-8 |

| Description of Reverification Requirements: | Reverification Method: | Hazard Report(s): |
|---|---|---|
| See section 5.3 for details. | | |

| Required Reverification Data: | Data Submittal Dates: |
|---|---|
| | |

Applicable Document(s):

SSP 57000, par. 3.12.5.3

| Number | Title | Purpose | Method | Hazard Report(s) |
|---|---|---|---|---|
| IIT-ME-034 | MECHANICAL - TOGGLE SWITCH DIMENSIONS | ISS | I | |

MSFC-RQMT-2888 Paragraph Number(s), Title(s), and Method(s):
3.10.4.10 Toggle Switches (I)

Requirement Summary:

Toggle switches should be of a standard size.

Detailed Descriptions of Requirements:

Toggle switches shall be verified by inspection. Verification shall be considered successful when an inspection of the flight article drawings shows that toggle switch dimensions meet the requirements as specified in MSFC-RQMT-2888 Paragraph 3.10.4.10.

| Required Verification Data: | Data Submittal Dates: |
|---|---|
| 1. Certificate of Compliance (COC). | 1. L-8 |

| Description of Reverification Requirements: | Reverification Method: | Hazard Report(s): |
|---|---|---|
| See section 5.3 for details. | | |

| Required Reverification Data: | Data Submittal Dates: |
|---|---|
| | |

Applicable Document(s):

SSP 57000, par. 3.12.5.4

Verification Definition Sheets

| Number | Title | Purpose | Method | Hazard Report(s) |
|---|---|---|---|---|
| IIT-ME-036 | MECHANICAL - CAPTIVE PARTS | ISS | A&D&I | |

MSFC-RQMT-2888 Paragraph Number(s), Title(s), and Method(s):

3.10.5.1.a Stowage Container Contents Restraints (A&I)
3.10.5.1.b Stowage Container Contents Restraints (D)
3.10.5.1.c Stowage Container Contents Restraints (D)
3.10.5.3 Captive Parts (I)

Requirement Summary:

These requirements ensure that the contents of container/stowage box do not escape when they are opened; and they can be removed from the tray without using any tools. Also, any unrestrained parts that are temporarily removed from the containers/stowage box must be held captive.

Detailed Descriptions of Requirements:

A. i. The investigation container/stowage box contents restraints shall be verified by inspection and analysis. The inspection and analysis shall be of the drawings of the flight hardware or hardware which replicates the flight hardware configuration. Verification shall be considered successful when the inspection and analysis shows that all items in a container/stowage box are restrained in a manner to prevent floating when opened or closed.

ii. The investigation container/stowage box contents will be verified by demonstration. The demonstration shall be performed on the investigation container/stowage box contents or hardware. Verification shall be considered successful when a demonstration shows that the restrained investigation container/stowage box contents (including the restraints mentioned in 3.10.5.1.a) do not jam the drawer during opening or closing.

iii. The restraints for the investigation container/stowage box contents shall be verified by demonstration. The demonstration shall be performed on the investigation container/stowage box contents and the restraint. The verification shall be considered successful when the demonstration shows that the contents of the investigation container/stowage box can be removed and/or replaced without using a tool under 1 G.

B. Captive parts shall be verified by inspection. Verification shall be considered successful when the inspection shows that all parts that are removed on-orbit are held captive, or provisions for temporarily stowing the loose items are provided.

| Required Verification Data: | Data Submittal Dates: |
|---|---|
| 1. Certificate of Compliance (COC). | 1. L-8 |

| Description of Reverification Requirements: | Reverification Method: | Hazard Report(s): |
|---|---|---|
| See section 5.3 for details. | | |

| Required Reverification Data: | Data Submittal Dates: |
|---|---|
| | |

Applicable Document(s):

SSP 57000, par. 3.12.6.1 and 3.12.6.3

| Number | Title | Purpose | Method | Hazard Report(s) |
|---|---|---|---|---|
| IIT-ME-037 | MECHANICAL - HANDLES | ISS | A&D&I | |

MSFC-RQMT-2888 Paragraph Number(s), Title(s), and Method(s):
3.10.5.4 Handles and Restraints (D or I)
3.10.5.5 Handle Location/Front Access (I)
3.10.6 Handle Dimensions (D)

Requirement Summary:
These requirements ensure that the investigation provide handles or other suitable means for grasping them (if required) and that the handles/grasping means satisfy specified design requirements.

Detailed Descriptions of Requirements:

A. All investigation items which cannot be grasped with one hand shall be provided with handles or other suitable means for grasping, tethering, carrying, and restraining as specified in MSFC-RQMT-2888 Paragraph 3.10.5.4. Verification of investigation equipment grasp capability shall be by demonstration or inspection. The demonstration shall show that sufficient grasp capability is provided. The inspection shall utilize drawings to verify that a handle or other suitable grasp area is provided for portable equipment. The demonstration or inspection shall be considered successful when it is shown that the portable equipment can be grasped by both 5$^{th}$ percentile and 95$^{th}$ percentile personnel using one hand.

B. Handles and grasp areas shall be placed on the accessible surface of a payload item consistent with the removal direction in accordance with MSFC-RQMT-2888 Paragraph 3.10.5.5. Verification shall be considered successful when an inspection of the flight hardware drawings confirms compliance with the requirement.

C. Hinged, foldout, or attachable (i.e., non-fixed) handles will comply with the requirements below:
Verification shall be considered successful when the following items are met:
   i. An analysis of flight hardware drawings and demonstration of the flight hardware confirms that non-fixed handles have a stop position for holding the handle perpendicular to the surface on which it is mounted.
   ii. Demonstration of flight hardware shows that non-fixed handles can be put in the use position by one hand and that they can be removed or stowed with one hand.
   iii. Inspection and demonstration of flight hardware confirms that attachable/removable handles incorporate tactile and/or visual indication of locked/unlocked status.

| Required Verification Data: | Data Submittal Dates: |
|---|---|
| 1. Certificate of Compliance (COC). | 1. L-8 |

| Description of Reverification Requirements: | Reverification Method: | Hazard Report(s): |
|---|---|---|
| See section 5.3 for details. | | |

| Required Reverification Data: | Data Submittal Dates: |
|---|---|
| | |

Applicable Document(s):
SSP 57000, par. 3.12.6.4.1, 3.12.6.4.3, 3.12.6.4.4, and 3.12.6.4.5 and Table 3.12.6.4.2-1

Verification Definition Sheets

| Number | Title | Purpose | Method | Hazard Report(s) |
|---|---|---|---|---|
| IIT-ME-041 | MECHANICAL - BAR CODING | ISS | I | |

MSFC-RQMT-2888 Paragraph Number(s), Title(s), and Method(s):
C.3.5.11 Bar Coding (I)

Requirement Summary:

Loose equipment, consumables, and ORUs are required to have "code 39" bar codes for identification.

Detailed Descriptions of Requirements:

Bar coding shall be verified by inspection. Verification shall be considered successful when an inspection shows that decals, labels, or placards using bar codes are as specified in MSFC-RQMT-2888, Paragraph C.3.5.11 (Appendix C), and are identified on the drawings or on the flight equipment for loose equipment, consumables, and ORUs.

| Required Verification Data: | Data Submittal Dates: |
|---|---|
| 1. Certificate of Compliance (COC). | 1. L-8 |

| Description of Reverification Requirements: | Reverification Method: | Hazard Report(s): |
|---|---|---|
| See section 5.3 for details. | | |

| Required Reverification Data: | Data Submittal Dates: |
|---|---|
| | |

Applicable Document(s):

SSP 57000, par. 3.12.7.5.13

| Number | Title | Purpose | Method | Hazard Report(s) |
|---|---|---|---|---|
| IIT-ME-043 | MECHANICAL - LIGHTING DESIGN | ISS | D | |

MSFC-RQMT-2888 Paragraph Number(s), Title(s), and Method(s):
3.10.2.2.4 Lighting Design (D)

Requirement Summary:

Lighting provided by the investigation shall be dimmable.

Detailed Descriptions of Requirements:

A. Verification of a dimmable light source shall be by demonstration. The demonstration shall be considered successful when the light source is demonstrated to be continuously adjustable between 0 (off) and 100 percent (on) output.

| Required Verification Data: | Data Submittal Dates: |
|---|---|
| 1. Certificate of Compliance (COC). | 1. L-8 |

| Description of Reverification Requirements: | Reverification Method: | Hazard Report(s): |
|---|---|---|
| See section 5.3 for details. | | |

| Required Reverification Data: | Data Submittal Dates: |
|---|---|
| | |

Applicable Document(s):

SSP 57000, par. 3.12.3.4 and Tables 3.12.3.4-1 and 4.3.12.3.4-1

Verification Definition Sheets

| Number | Title | Purpose | Method | Hazard Report(s) |
|---|---|---|---|---|
| IIT-ME-046 | MECHANICAL - ATTACHMENT PROVISIONS | IIT | T&I | |

MSFC-RQMT-2888 Paragraph Number(s), Title(s), and Method(s):
3.1.1.3 Attachment Provisions (T)

Requirement Summary:

The investigation attach points must be compatible with the MSG structural attach points.

Detailed Descriptions of Requirements:
The investigation shall participate in a physical and functional interface verification test of the investigation hardware with MSG as specified in MSFC-RQMT-2888, paragraph 3.1.1.3.

Investigation provided fasteners shall be verified by inspection. Verification shall be considered successful when the inspection shows that the fasteners are M6x1.0 pitch with an engagement of 6mm.

| Required Verification Data: | Data Submittal Dates: |
|---|---|
| 1. Physical Test and exclusion zone test (using either EU or GU) | 1. L-20 |
| 2. Function Test with GU | 2. L-9 |
| 3. Inspection of fasteners | 3. L-9 |

| Description of Reverification Requirements: | Reverification Method: | Hazard Report(s): |
|---|---|---|
| See section 5.3 for details. | | |

| Required Reverification Data: | Data Submittal Dates: |
|---|---|
| | |

Applicable Document(s):

| Number | Title | Purpose | Method | Hazard Report(s) |
|---|---|---|---|---|
| IIT-ME-053 | MECHANICAL - BURRS AND PROTRUSIONS | ISS | A&I | |

MSFC-RQMT-2888 Paragragh Number(s), Title(s), and Method(s):
3.10.8.4.4 Securing Pins (A)
3.10.8.4.5 Levers, Cranks, Hooks, & Controls (A&I)
3.10.8.4.6 Burrs (I)

Requirement Summary:

Burrs and catch points of investigation hardware must be removed/protected from equipment that is accessible to the crew.

Detailed Descriptions of Requirements:

A. Securing Pins
An analysis of payload hardware and flight drawings shall be performed to verify that securing pins above handholds do not back out. The verification shall be considered successful when the analysis shows the requirement has been met.

B. Levers, Cranks, Hooks, and Controls
Verification shall be by analysis and inspection. The verification shall be considered successful when the inspection and analysis shows that all levers, cranks, hooks, and controls have been properly covered or guarded, and cannot pinch, snag, or cut the crewmembers or their clothing.

C. Burrs
Verification shall be by inspection. The verification shall be considered successful when the inspection shows that all surfaces have been properly deburred.

| Required Verification Data: | Data Submittal Dates: |
|---|---|
| 1. Certificate of Compliance (COC). | 1. L-8 |

| Description of Reverification Requirements: | Reverification Method: | Hazard Report(s): |
|---|---|---|
| See section 5.3 for details. | | |

| Required Reverification Data: | Data Submittal Dates: |
|---|---|
| | |

Applicable Document(s):

SSP 50005, par. 6.3.1.1
SSP 57000, par. 3.12.9.6, 3.12.9.7, and 3.12.9.8
NSTS 1700.7

Verification Definition Sheets

| Number | Title | Purpose | Method | Hazard Report(s) |
|---|---|---|---|---|
| IIT-ME-055 | MECHANICAL - FIRE SUPPRESSION ACCESS HOLE | ISS | A&I&D | |

MSFC-RQMT-2888 Paragragh Number(s), Title(s), and Method(s):
3.8.1.2a,b,c Investigation Fire Suppression

Requirement Summary:

Fire suppression access holes must be provided; they must also be usable, and labeled.

Detailed Descriptions of Requirements:
A. Portable Fire Extinguisher
Verification that investigation hardware located outside the WV provides a Portable Fire Extinguisher (PFE) access port for equipment containing a potential fire source shall be by inspection and analysis. Verification shall be considered successful when the inspection of the hardware to flight approved drawing's shows that the access port is a hole between 12.7 mm (0.5 inch), for a panel thickness of < 3.175 mm (0.125 inch) and 25.4 mm (1.0 inch.) in diameter for a panel thickness of > 3.175 mm (0.125 inch).
B. Fire Suppression Access Port Accessibility
Verification that the design of the investigation permits the PFE nozzle to interface with the access port shall be by demonstration. Verification shall be considered successful when the demonstration shows that the design of the investigation allows the PFE nozzle to interface with the access port.
C. Labeling
Verification that the PFE access port is labeled with a SDD 32100397-002 "Fire Hole Decal" shall be by inspection. Verification shall be considered successful when the inspection shows that a SDD 32100397-002 "Fire Hole Decal" has been placed over the PFE access port.

| Required Verification Data: | Data Submittal Dates: |
|---|---|
| 1. Certificate of Compliance (COC). | 1. L-8 |

| Description of Reverification Requirements: | Reverification Method: | Hazard Report(s): |
|---|---|---|
| See section 5.3 for details. | | |

| Required Reverification Data: | Data Submittal Dates: |
|---|---|
| | |

Applicable Document(s):
FED-STD-595
MSFC-STD-275
SSP 57000, par. 3.1.1.4, 3.10.3.1, 3.10.3.2, 3.10.3.3, and 3.10.4 and Figure 3.1.1.3
NSTS.1700.7

| Number | Title | Purpose | Method | Hazard Report(s) |
|---|---|---|---|---|
| IIT-ME-057 | MECHANICAL –IDENTIFICATION LABELING | ISS | I | |

MSFC-RQMT-2888 Paragraph Number(s), Title(s), and Method(s):
3.10.7 Identification Labeling (I)

Requirement Summary:
This requirement ensures that labels required for investigation hardware are designed and developed in accordance with the requirements specified in MSFC-RQMT-2888 Appendix C.

Detailed Descriptions of Requirements:
An inspection shall be performed on all Labels on investigation hardware, loose equipment, consumables, ORUs, crew accessible connectors and cables, switches, indicators, and controls. The inspection shall be of the ISS Payload Label Approval Team (IPLAT), approval documentation provided in accordance with MSFC-RQMT-2888 Appendix C. The verification shall be considered successful when all of the above items have been shown to have IPLAT approved labels.

| Required Verification Data: | Data Submittal Dates: |
|---|---|
| 1. Certificate of Compliance (COC) showing IPLAT approval. | 1. L-8 |

| Description of Reverification Requirements: | Reverification Method: | Hazard Report(s): |
|---|---|---|
| See section 5.3 for details. | | |

| Required Reverification Data: | Data Submittal Dates: |
|---|---|
| | |

Applicable Document(s):
SSP 57000, par. 3.12.7

Verification Definition Sheets

| Number | Title | Purpose | Method | Hazard Report(s) |
|---|---|---|---|---|
| IIT-EL-001 | ELECTRICAL - STEADY-STATE VOLTAGE CHARACTERISTICS | ISS&IIT | T | |

MSFC-RQMT-2888 Paragraph Number(s), Title(s), and Method(s):
3.2.1.1 Steady State Voltage Characterisitcs (T)

Requirement Summary:

Investigation power must be compatible with the nominal RPDA voltage range.

Detailed Descriptions of Requirements:

The investigation shall be operated under selected loading conditions that envelope the operational loading. In general it will be sufficient to show that the hardware performs in various load conditions at the low voltage limit and at the high voltage limit. The verification shall be considered successful when the test data shows that the investigation can perform all functional capabilities under low and high voltage conditions and that EPCE is compatible with the steady-state voltage limits as specified in MSFC-RQMT-2888, Table III.

| Required Verification Data: | Data Submittal Dates: |
|---|---|
| 1. Test report | 1. L-8 |

| Description of Reverification Requirements: | Reverification Method: | Hazard Report(s): |
|---|---|---|
| See section 5.3 for details. | | |

| Required Reverification Data: | Data Submittal Dates: |
|---|---|
| | |

Applicable Document(s):

SSP 57000, par. 3.2.1.1.1 and 3.2.1.1.2

| Number | Title | Purpose | Method | Hazard Report(s) |
|---|---|---|---|---|
| IIT-EL-002 | ELECTRICAL - RIPPLE VOLTAGE CHARACTERISTICS, NOISE, AND SPECTRUM | ISS&IIT | A | |

MSFC-RQMT-2888 Paragraph Number(s), Title(s), and Method(s):
3.2.1.2.1 Ripple Voltage and Noise (A)
3.2.1.2.2 Ripple Voltage Spectrum (A)

Requirement Summary:

These requirements ensure that all investigation or other electrical-power-consuming equipment are compatible with specific ripple voltage, ripple-voltage spectrum, and ripple-voltage noise characteristics of the RPDA.

Detailed Descriptions of Requirements:

Ripple Voltage and Noise requirements shall be verified by analysis.
The verification shall be considered successful when the analysis of the CS-01 test data (see MSFC-RQMT-2888, Appendix B, B.2.2.1 and subs) shows that the investigation EPCE connected to the RPDA operates and is compatible with the RPDA ripple voltages and noise levels at the frequencies specified in MSFC-RQMT-2888, Table IV.

Ripple Voltage Spectrum requirements shall be verified by analysis.
The verification shall be considered successful when the analysis of the CS-01 and CS-02 test data (see MSFC-RQMT-2888, Appendix B, B.2.2.1 and subs, and B.2.2.2 and subs) shows that the investigation EPCE connected to the RPDA operates and is compatible with the EPS Ripple Voltage Spectrum shown in MSFC-RQMT-2888, Figure 7.

| Required Verification Data: | Data Submittal Dates: |
|---|---|
| 1. Analysis providing plot of input voltage vs. frequency. | 1. L-10 |

| Description of Reverification Requirements: | Reverification Method: | Hazard Report(s): |
|---|---|---|
| See section 5.3 for details. | | |

| Required Reverification Data: | Data Submittal Dates: |
|---|---|
| | |

Applicable Document(s):

SSP 30237
SSP 30238
SSP 57000, par. 3.2.1.2.1, 3.2.1.2.2, 3.2.2.1, 3.2.2.2, 3.2.2.4, and Figure 3.2.1.2.2-1
NSTS.1700.7

Verification Definition Sheets

| Number | Title | Purpose | Method | Hazard Report(s) |
|---|---|---|---|---|
| IIT-EL-003 | ELECTRICAL - TRANSIENT VOLTAGES | ISS | A or T | |

MSFC-RQMT-2888 Paragraph Number(s), Title(s), and Method(s):
3.2.1.3 Transient Voltages (A or T)

Requirement Summary:

Investigation EPCE must be compatible with voltage transients on the electrical power system.

Detailed Descriptions of Requirements:

Input voltages shall be 116 Vdc and 126 Vdc.

Verification of compatibility with the specified Transient Voltages shall be performed by test or analysis of investigation EPCE operation across the transient envelope as specified in MSFC-RQMT-2888, Figure 8.

The verification shall be considered successful when the test or analysis shows that the EPCE is compatible with the transient voltage characteristics as specified in MSFC-RQMT-2888, Figure 8.

Note: It is sufficient to test at the high voltage and at the low voltage limit as specified in MSFC-RQMT-2888, Figure 8. (It is not necessary to test for 143.1 V transients from 116 V or for 99 V transients from 126 V.)

| Required Verification Data: | Data Submittal Dates: |
|---|---|
| 1. Test report or analysis showing compatibility with transients. | 1. L-8 |

| Description of Reverification Requirements: | Reverification Method: | Hazard Report(s): |
|---|---|---|
| See section 5.3 for details. | | |

| Required Reverification Data: | Data Submittal Dates: |
|---|---|
| | |

Applicable Document(s):

SSP 57000, par. 3.2.1.3.1; Figure 3.2.1.3.1-1
SSP 30482, Vol. I

| Number | Title | Purpose | Method | Hazard Report(s) |
|---|---|---|---|---|
| IIT-EL-004 | ELECTRICAL - FAULT CLEARING AND PROTECTION | ISS | A | |

MSFC-RQMT-2888 Paragraph Number(s), Title(s), and Method(s):
3.2.1.3.1.a Fault Clearing and Protection (A)
3.2.1.3.1.b Fault Clearing and Protection (A)

Requirement Summary:

The investigation EPCE must be compatible with short-duration high voltage transients that can result from fault clearing and protection system operation.

Detailed Descriptions of Requirements:

a. For investigation EPCE connected to the 120 Vdc power supply, Transient Voltages shall be as specified in MSFC-RQMT-2888, Figure 9 for both a worst-case positive and negative transient.
The verification shall be considered successful when analysis shows that the investigation EPCE does not produce an unsafe condition or one that could result in damage to ISS equipment or payload hardware from the EPS transient voltages as specified in MSFC-RQMT-2888, Figure 9.
Note: The transient shown in the expanded view is a composite of three possible transient conditions; consequently, the analysis may consist of separate examination of the 12 microsecond transient, the 150 microsecond transient and the 300 microsecond transient.

b. For investigation EPCE connected to the 28 Vdc secondary power source, transient voltages shall be as specified in MSFC-RQMT-2888, Figure 10.
The verification shall be considered successful when analysis shows that the investigation EPCE does not produce an unsafe condition or one that could result in damage to ISS equipment or payload hardware from the EPS transient voltages as specified in MSFC-RQMT-2888, Figure 10.

| Required Verification Data: | Data Submittal Dates: |
|---|---|
| 1. Analysis showing compliance. | 1. L-8 |

| Description of Reverification Requirements: | Reverification Method: | Hazard Report(s): |
|---|---|---|
| See section 5.3 for details. | | |

| Required Reverification Data: | Data Submittal Dates: |
|---|---|
| | |

Applicable Document(s):

SSP 57000, par. 3.2.1.3.3 and Figure 3.2.1.3.3-1

Verification Definition Sheets

| Number | Title | Purpose | Method | Hazard Report(s) |
|---|---|---|---|---|
| IIT-EL-005 | ELECTRICAL - NON-NORMAL VOLTAGE RANGE | ISS | A | |

MSFC-RQMT-2888 Paragraph Number(s), Title(s), and Method(s):
3.2.1.3.2 Non-normal Voltage Range (A)

Requirement Summary:

The Investigation EPCE must not produce an unsafe condition or one that could result in damage to ISS, MSG, or investigation equipment when non-normal voltages occur.

Detailed Descriptions of Requirements:

Verification of compatibility with Non-Normal voltage range conditions shall be performed by analysis. The analysis shall ensure that the investigation EPCE will not produce an unsafe condition nor a condition that could result in damage to ISS, MSG, or investigation equipment external to the investigation EPCE, when non-normal voltage levels as specified in MSFC-RQMT-2888, paragraph 3.2.1.3.2 are present. The analysis should be performed with all converters directly downstream of the RPDA.

The verification shall be considered successful when analysis shows that the investigation EPCE is safe within interface conditions as specified in MSFC-RQMT-2888, paragraph 3.2.1.3.2.

| Required Verification Data: | Data Submittal Dates: |
|---|---|
| 1. Analysis showing compliance. | 1. L-8 |

| Description of Reverification Requirements: | Reverification Method: | Hazard Report(s): |
|---|---|---|
| See section 5.3 for details. | | |

| Required Reverification Data: | Data Submittal Dates: |
|---|---|
| | |

Applicable Document(s):

SSP 57000, par. 3.2.1.3.4

| Number | Title | Purpose | Method | Hazard Report(s) |
|---|---|---|---|---|
| IIT-EL-006 | ELECTRICAL – POWER CHARACTERISTICS | IIT | A&T | |

MSFC-RQMT-2888 Paragraph Number(s), Title(s), and Method(s):
3.2.1.a Electrical Power Characteristics (T)
3.2.1.b Electrical Power Characteristics (A)

Requirement Summary:

The total investigation power consumption must not exceed allowable limits defined in the Unique Investigation Hardware ICD.

Detailed Descriptions of Requirements:

Verification of investigation power consumption shall be accomplished by test. The total investigation power consumption shall not exceed the power allocation in the Unique Investigation Hardware ICD. The test shall be considered successful when test data confirms that the power allocation in the Unique Investigation Hardware ICD is not exceeded.

Note: The EU shall be used if done as part of the integrated testing.

An analysis shall be performed to show that the investigation hardware is compatible with the RPDA characteristics. The analysis shall be considered successful when compliance with MSFC-RQMT-2888, paragraph 3.2.1.b is met.

NOTE: Test can be closed during function testing using either the GU or EU.

| Required Verification Data: | Data Submittal Dates: |
|---|---|
| 1. Test report. | 1. L-8 |
| 2. Analysis report. | 2. L-8 |

| Description of Reverification Requirements: | Reverification Method: | Hazard Report(s): |
|---|---|---|
| See section 5.3 for details. | | |

| Required Reverification Data: | Data Submittal Dates: |
|---|---|
| | |

Applicable Document(s):

Verification Definition Sheets

| Number | Title | Purpose | Method | Hazard Report(s) |
|---|---|---|---|---|
| IIT-EL-007 | ELECTRICAL - POWER AND C&DH CONNECTORS AND PIN ASSIGNMENTS | IIT | D&I | |

MSFC-RQMT-2888 Paragraph Number(s), Title(s), and Method(s):

3.2.2.1.b,c,d Primary Power Connector (D&I)
3.2.2.2.b,c,d Secondary Power Connector (D&I)
3.3.6.1 MLC Connector/Pin Assignments (D&I)
3.3.3.1.b RS-422 Connector/Pin Assignments (D&I)
3.3.4.1.b I/O Connector/Pin Assignments (D&I)
3.3.5.1.b Ethernet Connector/Pin Assignments (D&I)
3.10.3.3.11 Pin Identification (I)

Requirement Summary:
These requirements ensure that the connectors and pin assignments of the investigation and electrical-power-consuming equipment are compatible with the available interfaces.

Detailed Descriptions of Requirements:

A. Verification of primary and secondary power, RS-422, MLC, Ethernet and I/O Data of the investigation physical mating to the WV connectors shall be by demonstration. The verification shall be considered successful when the demonstration shows that all investigation interfaces identified in the Unique Investigation ICD can physically mate with the corresponding connectors.

Note: Demonstration will be done using either the EU or GU.

B. Verification of primary and secondary power, RS-422, MLC, Ethernet and I/O Data connectors appropriate pin assignments shall be by inspection. The inspection shall be an inspection of the payload drawings to verify that the primary and secondary power, RS-422, MLC, Ethernet and I/O Data connector pinouts are as specified in the Unique Investigation ICD.

C. Pin identification shall be verified by inspection. Verification shall be considered successful when an inspection shows each pin is uniquely identified (i.e., labeled).

| Required Verification Data: | Data Submittal Dates: |
|---|---|
| 1. Certificate of Compliance (COC). | 1. L-8 |

| Description of Reverification Requirements: | Reverification Method: | Hazard Report(s): |
|---|---|---|
| See section 5.3 for details. | | |

| Required Reverification Data: | Data Submittal Dates: |
|---|---|
| | |

Applicable Document(s):

| Number | Title | Purpose | Method | Hazard Report(s) |
|---|---|---|---|---|
| IIT-EL-010 | ELECTRICAL - SURGE CURRENT | ISS&IIT | A&T | |

MSFC-RQMT-2888 Paragraph Number(s), Title(s), and Method(s):
3.2.2.3.a Surge Current (A&T)

Requirement Summary:

The Investigation EPCE surge currents upon activation and deactivation must not exceed the allowable limits.

Detailed Descriptions of Requirements:

Verification of compatibility with Surge Current limits shall be performed by test at high, nominal, and low input voltage values as specified. Input power to the investigation EPCE should be representative of the ISS power environment. The power source used to perform the test shall be capable of providing a range of power between 0 kW to 6 kW at 116-126 Vdc. The EPCE shall be operated under worst-case loading conditions that envelope operational loading and voltage ranges. The analysis shall be performed using test data from the above test. The analysis shall show that the EPCE surge current envelope does not exceed the limits as specified in MSFC-RQMT-2888, paragraph 3.2.2.3. These requirements apply to all operating modes and changes including power-up and power-down.

Note: The EU shall be used if done as part of the integration testing.

| Required Verification Data: | Data Submittal Dates: |
|---|---|
| 1. Analysis report including surge current profiles for integrated investigation configuration. | 1. L-10 |
| 2. Test report. | 2. L-10 |

| Description of Reverification Requirements: | Reverification Method: | Hazard Report(s): |
|---|---|---|
| See section 5.3 for details. | | |

| Required Reverification Data: | Data Submittal Dates: |
|---|---|
| | |

Applicable Document(s):

SSP 57000, par. 3.2.2.4

Verification Definition Sheets

| Number | Title | Purpose | Method | Hazard Report(s) |
|---|---|---|---|---|
| IIT-EL-011 | ELECTRICAL - REVERSE ENERGY/CURRENT | ISS&IIT | A | |

MSFC-RQMT-2888 Paragraph Number(s), Title(s), and Method(s):
3.2.2.4 Reverse Energy/Current (A)

Requirement Summary:

The equipment must not introduce unacceptable Reverse Energy/Current into the MSG power system.

Detailed Descriptions of Requirements:

Verification of compatibility with Reverse Energy/Current limits shall be performed by analysis at 3 kW.

Input power to the EPCE should be representative of the MSG power environment.

The power source used to perform the analysis shall be capable of providing a range of power between 0 kW to 6 kW at 116-126 Vdc.

The EPCE shall be analyzed under selected loading conditions that envelope operational loading.

The verification shall be considered successful when the following conditions are met:

a. Analysis shows that the EPCE complies with requirements as specified in MSFC-RQMT-2888, paragraph 3.2.2.4, Table XIII for the reverse energy/current into the upstream power source.

b. Analysis shows the reverse-energy or the reverse-current requirement is met for all environmental conditions as specified in MSFC-RQMT-2888, when powered from a voltage source with a source impedance of 0.1 ohm.

| Required Verification Data: | Data Submittal Dates: |
|---|---|
| 1. Analyis comparing worst case reverse current and potential reverse current case conditions to MSFC-RQMT-2888, Table XIII allowables. | 1. L-10 |

| Description of Reverification Requirements: | Reverification Method: | Hazard Report(s): |
|---|---|---|
| See section 5.3 for details. | | |

| Required Reverification Data: | Data Submittal Dates: |
|---|---|
| | |

Applicable Document(s):

SSP 57000, par. 3.2.2.5 and Table 3.2.2.5-1

| Number | Title | Purpose | Method | Hazard Report(s) |
|---|---|---|---|---|
| IIT-EL-012 | ELECTRICAL – CIRCUIT PROTECTION DEVICES | IIT | A | |

MSFC-RQMT-2888 Paragraph Number(s), Title(s), and Method(s):

3.2.2.5.a Circuit Protection Devices (A)
3.2.2.5.b Circuit Protection Devices (A)
3.2.2.5.c Circuit Protection Devices (A)
3.2.2.5.d Circuit Protection Devices (A)

Requirement Summary:
Investigation hardware connected to the MSG RPDA must be compatible with the power outlet trip characteristics.

Detailed Descriptions of Requirements:

An analysis shall be performed to show that the investigation hardware connected to the RPDA is compatible with the power outlet trip characteristics.

For the 120 Vdc primary power source, the analysis shall be considered successful when the analysis shows compliance with MSFC-RQMT-2888, paragraph 3.2.2.5.a and Figure 14.

For the 28 Vdc secondary power source, the analysis shall be considered successful when the analysis shows compliance with MSFC-RQMT-2888, paragraph 3.2.2.5.b and Figure 15.

For the 5 Vdc secondary power source, the analysis shall be considered successful when the analysis shows compliance with MSFC-RQMT-2888, paragraph 3.2.2.5.c.

For the ±12 Vdc secondary power source, the analysis shall be considered successful when the analysis shows compliance with MSFC-RQMT-2888, paragraph 3.2.2.5.d.

| Required Verification Data: | Data Submittal Dates: |
|---|---|
| 1. Analysis report. | 1. L-8 |

| Description of Reverification Requirements: | Reverification Method: | Hazard Report(s): |
|---|---|---|
| See section 5.3 for details. | | |

| Required Reverification Data: | Data Submittal Dates: |
|---|---|
| | |

Applicable Document(s):
NSTS.1700.7

| Number | Title | Purpose | Method | Hazard Report(s) |
|---|---|---|---|---|
| IIT-EL-013 | ELECTRICAL - OVERLOAD PROTECTION | ISS | D&I | |

MSFC-RQMT-2888 Paragraph Number(s), Title(s), and Method(s):
3.10.8.3.1 Device Accessibility (I) 3.10.8.3.4 Overload Protection Identification (I)
3.10.8.3.2 Extractor-Type Fuse Holder (D) 3.10.8.3.5 Automatic Restart Protection (D)
3.10.8.3.3 Overload Protection Location (I)

Requirement Summary:
Investigation hardware must meet overload protection accessibility, location, labeling, and identification specifications.

Detailed Descriptions of Requirements:

A. Investigation hardware inspection shall be used to verify that an overload protective device will not be accessible without opening a door or cover (except operating handles or buttons of a circuit breaker, the cap of an extractor-type fuse holder, and similar parts that project outside the enclosure). Verification shall be considered successful when inspection of the Investigation hardware to the drawing's shows that a door or cover must be opened to access the overload protective device.

B. Demonstration shall be used to verify that the arrangement of the extractor-type fuse holder operates such that the fuse is extracted when the cap is removed. Verification shall be considered successful when demonstration shows that the fuse is extracted when the removable cap assembly is removed.

C. Investigation hardware inspection shall be used to verify that overload protection (fuses and circuit breakers), intended to be manually replaced or physically reset on-orbit, are located where they can be seen and replaced or reset without removing other components. Verification shall be considered successful when Investigation hardware inspection results show that overload protection devices are directly visible and accessible without removal of other components.

D. Investigation hardware inspection shall be used to verify that each overload protector (fuse or circuit breaker), intended to be manually replaced or physically reset on-orbit, shall be readily identified or keyed (mechanically or color coded) for its rated value. Verification shall be considered successful when inspection results shows that the rated identification for each overload protector is in place.

E. The demonstration shall first induce an "Overload Initiated Shutdown" and then observe system response to assure that Automatic Restart does not occur unless the Protection Switch/Control is explicitly operated to enable restarting. The verification of Automatic Restart Protection shall be considered successful when it is shows that automatic restart cannot occur following an overload-initiated shutdown without explicit operation of the protection switch/control to enable restarting.

| Required Verification Data: | Data Submittal Dates: |
|---|---|
| 1. Certificate of Compliance (COC). | 1. L-8 |

| Description of Reverification Requirements: | Reverification Method: | Hazard Report(s): |
|---|---|---|
| See section 5.3 for details. | | |

| Required Reverification Data: | Data Submittal Dates: |
|---|---|
| Continued on next page | |

| Number | Title | Purpose | Method | Hazard Report(s) |
|---|---|---|---|---|
| IIT-EL-013 | ELECTRICAL - OVERLOAD PROTECTION | ISS | D&I | |

Continued from previous page

Applicable Document(s):
SSP 57000, par. 3.2.2.6.1.1, 3.12.9.1.4.1, 3.12.9.1.4.2, 3.12.9.1.4.3, 3.12.9.1.4.4, and 3.12.9.1.4.5

Verification Definition Sheets

| Number | Title | Purpose | Method | Hazard Report(s) |
|---|---|---|---|---|
| IIT-EL-015 | ELECTRICAL - MAXIMUM RIPPLE VOLTAGE EMISSIONS | ISS | A&T | |

MSFC-RQMT-2888 Paragraph Number(s), Title(s), and Method(s):
3.2.2.6 Deleted

Requirement Summary:

Investigation EPCE induced Ripple Voltage emissions must not exceed allowable limits.

Detailed Descriptions of Requirements:

Deleted

| Required Verification Data: | Data Submittal Dates: |
|---|---|
| 1. | 1. |

| Description of Reverification Requirements: | Reverification Method: | Hazard Report(s): |
|---|---|---|
| See section 5.3 for details. | | |

| Required Reverification Data: | Data Submittal Dates: |
|---|---|
| | |

Applicable Document(s):

| Number | Title | Purpose | Method | Hazard Report(s) |
|---|---|---|---|---|
| IIT-EL-016 | ELECTRICAL – LOAD-STAND ALONE STABILITY | IIT | A | |

MSFC-RQMT-2888 Paragraph Number(s), Title(s), and Method(s):
3.2.2.7 Electrical Load-Stand Alone Stability

Requirement Summary:
Load stability must be maintained under all nominal source/load conditions.

Detailed Descriptions of Requirements:
Load stability shall be verified by analysis of test data for CS-01, CS-02, and CS-06 (See VDS EL-020 for test requirements).. The verification shall be considered successful when analysis of test data from the requirements identified in the following paragraphs are met.: (CS01) paragraph 3.2.4.4.2.2.1, (CS02) paragraph 3.2.4.4.2.2.2, and (CS06) paragraph 3.2.4.4.2.2.3.

NOTE: WAIVERS TO EMI DO NOT CONSITUTE A WAIVER TO THIS REQUIREMENT.

| Required Verification Data: | Data Submittal Dates: |
|---|---|
| 1. Analysis report (A brief summary of the results of EMI/EMC tests). A detailed report independent of EMI/EMC request for waiver is necessary to show that stand-alone stability exists if EMI/EMC waivers or deviations are required). | 1. L-10 |

| Description of Reverification Requirements: | Reverification Method: | Hazard Report(s): |
|---|---|---|
| See section 5.3 for details. | | |

| Required Reverification Data: | Data Submittal Dates: |
|---|---|
| | |

Applicable Document(s):
SSP 30238
SSP 57000, par. 3.2.2.8 and 3.2.2.10

Verification Definition Sheets

| Number | Title | Purpose | Method | Hazard Report(s) |
|---|---|---|---|---|
| IIT-EL-017 | ELECTRICAL - WIRE DERATING | ISS | A | |

MSFC-RQMT-2888 Paragraph Number(s), Title(s), and Method(s):
3.2.3.1 Wire Derating (A)

Requirement Summary:

Wires must be derated for location and temperature of operation, and downstream wires from a protective device must have the capability of carrying the full current load.

Detailed Descriptions of Requirements:

Analysis shall be based upon the requirements of JSC Technical Memorandum 102179 as interpreted by NSTS/ISS 18798, Letter TA-92-038. These requirements ensure that wires are derated for location and temperature of operation and that downstream wires from a protective device each have the capability of carrying the full current load permitted by the protective device.

| Required Verification Data: | Data Submittal Dates: |
|---|---|
| 1. Certificate of Compliance (COC). | 1. L-8 |

| Description of Reverification Requirements: | Reverification Method: | Hazard Report(s): |
|---|---|---|
| See section 5.3 for details. | | |

| Required Reverification Data: | Data Submittal Dates: |
|---|---|
| | |

Applicable Document(s):

NSTS/ISS 18798, Tech-memo 102179
SSP 30312
SSP 57000, par. 3.2.3.1

| Number | Title | Purpose | Method | Hazard Report(s) |
|---|---|---|---|---|
| IIT-EL-020 | ELECTRICAL - ELECTROMAGNETIC INTERFERENCE/COMPATIBILITY | ISS | A&T | |

MSFC-RQMT-2888 Paragraph Number(s), Title(s), and Method(s):
3.2.4 Electromagnetic Compatibility (A & T)
3.2.4.4 Electromagnetic Emission and Susceptibility (A & T)
3.2.4.6 Alternating Current (ac) Magnetic Fields (A or T)
3.2.4.7 Direct Current (dc) Magnetic Fields (A & T)

Requirement Summary:
All investigation EPCE, must assure electromagnetic compatibility and protect against electromagnetic interference.

Detailed Descriptions of Requirements:

A. Electromagnetic Compatibility
The Electrical-EMC verification test requirements are met when results show that investigation EPCE EMC is in compliance with the requirements of MSFC-RQMT-2888, section 3.2.4 and subs. The analysis is based on end item qualification and EPCE design and analysis data. The analysis requirements are met when the data shows the investigation EPCE meets the EMC requirements of MSFC-RQMT-2888, section 3.2.4 and subs.

B. Electromagnetic Interference (Emission and Susceptibility Requirements)
Electromagnetic Interference (EMI) requirements for the investigation EPCE are considered met when all EMI test requirements of MSFC-RQMT-2888 are met. Test methods are specified in Appendix B of MSFC-RQMT-2888. The test requirements for the investigation EPCE are met when results show that the requirements of MSFC-RQMT-2888, section 3.2.4.4 and subs are met. The analysis of investigation EPCE is performed using subrack payload test data. The analysis shall be based on end item qualification data and investigation EPCE design and analysis data. The analysis shall be considered successful when the data shows the integrated rack and EPCE meet the EMC requirements of MSFC-RQMT-2888, section 3.2.4.4 and subs. An isolation evaluation must be included in the EMI analysis to verify the requirements of MSFC-RQMT-2888, section 3.2.4.4 and subs are met.

C. Alternating Current (ac) Magnetic Fields
Verification of the ac magnetic field emissions (30 Hz to 50 kHz), for investigation EPCE, shall be by test or analysis of equipment, cables, and interconnecting wiring. The analysis should be based on the test data of the components which generate the magnetic fields. Test setup guidelines will be per MSFC-RQMT-2888, Figure 41 or 42, not the setup identified by MIL-STD-462D. Guidelines of MSFC-RQMT-2888, Figure 41 and 42, requirement of 1 meter separation does not apply to RE01. Measurements are required from 30 Hz to 50 kHz rather than 100kHz required by MIL-STD-461D. Measurements are performed at 7cm from the generating equipment. In the event emissions are out-of-specification, measurements are performed at 50 cm from the generating equipment. Documentation may be included under 3.2.4.4 above. Verification shall be considered successful when test results show the generated ac magnetic fields of the investigation EPCE, including cables and interconnecting wiring, do not exceed the magnetic fieldsemission limits of 140 dB above 1 picotesla for frequency at 30Hz, and then falling 26.5 dB per decade to 3.5 kHz and 85 dB for frequencies ranging from 3.5 kHz to 50 kHz..

D. Direct Current (dc) Magnetic Fields
For equipment containing electromagnetic or permanent magnetic devices, verification that the equipment meets dc magnetic field emissions requirement of 170 dBpT shall be by test and analysis. The measurement or analysis of dc magnetic fields will be performed at 7 cm from the enclosure of the generating equipment. Measurements or analysis at 10 cm from the generating equipment will be performed if there is a dc magnetic field greater than 170 dBpT. Additional measurements or analysis will be performed at 10 cm increments away from the generating equipment until data proves the dc magnetic fields are 6 dB below the 170 dBpT. The verification will be considered successful when test or analysis results show the generated dc magnetic fields of the investigation EPCE connected to the RPDA do not exceed 170 dBpT at a distance of 7 cm from the generating equipment, including electromagnetic and permanent magnetic devices. Documentation may be included under 3.2.4.4 above. Verification closure will be accomplished under this paragraph number.

continued on next page

Verification Definition Sheets

| Number | Title | Purpose | Method | Hazard Report(s) |
|---|---|---|---|---|
| IIT-EL-020 | ELECTRICAL - ELECTROMAGNETIC INTERFERENCE/COMPATIBILITY | ISS | A&T | |

continued from previous page

| Required Verification Data: | Data Submittal Dates: |
|---|---|
| 1. Test Report for Item A (Results must be provided for each configuration in the worst-case operational modes. The report should include the test configuration/layout (including cables), photographs of the test configuration, and a description of testing equipment.) | 1. L-10 |
| 2. Test results in electronic format for Item A and B. | 2. L-10 |
| 3. For requirement 3.2.4.7, item D above, a tabular listing of each magnetic field measurement, distance from Equipment Under Test (EUT), and mode of EUT operation. | 3. L-10 |
| 4. For item C above, emissions greater than 20 dB below specified limits will be recorded in the EMI test report. In cases where the noise floor and ambient are not 20 dB below specified level, only those emissions above the noise floor/ambient are required to be recorded. (This verification data is submitted as part of Item 2 above, if required.) | 4. L-10 |

| Description of Reverification Requirements: | Reverification Method: | Hazard Report(s): |
|---|---|---|
| See section 5.3 for details. | | |

| Required Reverification Data: | Data Submittal Dates: |
|---|---|
| | |

Applicable Document(s):
MIL-STD-461
SSP 30237 (Entire Document)
SSP 30238 (Entire Document)
SSP 30243, par. 3.1, 3.5 and 3.6.2
SSP 57000, par. 3.1.1.4.G, 3.2.4, 3.2.4.4, 3.2.4.6, and 3.2.4.7
NSTS.1700.7

| Number | Title | Purpose | Method | Hazard Report(s) |
|---|---|---|---|---|
| IIT-EL-021 | ELECTRICAL - CABLE/WIRE DESIGN AND GROUNDING | ISS | A&T or A&T&I | |

MSFC-RQMT-2888 Paragraph Number(s), Title(s), and Method(s):
3.2.4.1 Electrical Grounding (A&T)
3.2.4.3 Cable/Wire Design and Control Requirements (A&T&I)

Requirement Summary:

Equipment must be electrically grounded and cable/wire design requirements must be met.

Detailed Descriptions of Requirements:

A. Electrical Grounding
The test will be considered successful when the results show that the investigation EPCE connected to the RPDA is in compliance with the requirements in Section 3.2.4.1 and subs of MSFC-RQMT-2888.
The analysis will be based on end item qualification data and EPCE design and analysis data. The analysis will be considered successful when the data shows the investigation EPCE connected to the RPDA is electrically grounded within the requirements of Section 3.2.4.1 and subs of MSFC-RQMT-2888 with shall statements.

B. Cable/Wire Design and Control Requirements (External Cables)
The test will be considered successful when the results show all requirements of Section 3.2.4.3 and subs of MSFC-RQMT-2888 with shall statements are met.
The analysis will be based on end item qualification data and EPCE design and analysis data. The analysis will be considered successful when the results show all the requirements of Section 3.2.4.3 and subs of MSFC-RQMT-2888 with shall statements are met.
The inspection will be based on physical/visual indications of the EPCE connected to the RPDA. The inspection will be considered successful when physical/visual indications show that external cable and wire design is in compliance with the requirements of Section 3.2.4.3 and subs of MSFC-RQMT-2888 with shall statements are met.

Harness requirements can normally be met by inspection of drawings and hardware.

Analysis is required to classify signals and determine the necessary isolation between signals.

Test may be required to determine impedance and sensitivity characteristics of the circuit when classification cannot be determined by examination of the circuit known characteristics.

| Required Verification Data: | Data Submittal Dates: |
|---|---|
| 1. Analysis report showing compliance of actual grounding (based on end item qualification test data) versus grounding design philosophy (in Design Analysis Report), and the compliance with Section 3.2.4.3 and subs of MSFC-RQMT-2888 with shall statements. | 1. L-10 |

| Description of Reverification Requirements: | Reverification Method: | Hazard Report(s): |
|---|---|---|
| See section 5.3 for details. | | |

| Required Reverification Data: | Data Submittal Dates: |
|---|---|
| | |

Applicable Document(s):
SSP 30240, Sec. 3
SSP 30243
SSP 57000, par. 3.2.4.1 and 3.2.4.3
NSTS.1700.7

Verification Definition Sheets

| Number | Title | Purpose | Method | Hazard Report(s) |
|---|---|---|---|---|
| IIT-EL-022 | ELECTRICAL - BONDING | ISS | A&I&T | |

MSFC-RQMT-2888 Paragraph Number(s), Title(s), and Method(s):
3.2.4.2 Electrical Bonding (A&I&T)

Requirement Summary:

Equipment must be electrically bonded.

Detailed Descriptions of Requirements:

The test will be considered successful when the results show all requirements of Section 3.2.4.2 and subs of MSFC-RQMT-2888 are met.

The analysis will be based on end item qualification data and investigation EPCE design and analysis data. The analysis will be considered successful when the data shows the investigation EPCE is electrically bonded within the requirements of Section 3.2.4.2 and subs of MSFC-RQMT-2888 are met. The inspection will be based on physical/visual indications of the investigation EPCE. The inspection will be considered successful when physical/visual indications show all requirements of Section 3.2.4.2 and subs of MSFC-RQMT-2888 are met. (Inspection results should be included in the test or analysis report.)

| Required Verification Data: | Data Submittal Dates: |
|---|---|
| 1. Test report showing compliance with Section 3.2.4.2 and subs of MSFC-RQMT-2888. | 1. L-10 |
| 2. Analysis report showing compliance with Section 3.2.4.2 and subs of MSFC-RQMT-2888. | 2. L-10 |

| Description of Reverification Requirements: | Reverification Method: | Hazard Report(s): |
|---|---|---|
| See section 5.3 for details. | | |

| Required Reverification Data: | Data Submittal Dates: |
|---|---|
| | |

Applicable Document(s):

NSTS 1700.7 ISS Addendum, Sec. 213 and 220
SSP 30245, (Entire Document)
SSP 57000, par. 3.2.4.2

Verification Definition Sheets

| Number | Title | Purpose | Method | Hazard Report(s) |
|---|---|---|---|---|
| IIT-EL-024 | ELECTRICAL - ELECTROSTATIC DISCHARGE | ISS | A&I or T&I | |

MSFC-RQMT-2888 Paragraph Number(s), Title(s), and Method(s):
3.2.4.5 Electrostatic Discharge (A&I or I&T)

Requirement Summary:

Equipment must not be susceptible to electrostatic discharges of less than 15, 000 volts

Detailed Descriptions of Requirements:

Electrostatic Discharge (ESD) (Susceptibility to ESD)

The analysis will be based on investigation EPCE design and analysis data. The test or analysis will be considered successful when the results show the requirements in MSFC-RQMT-2888, paragraph 3.2.4.5 have been met.

Analysis of the investigation EPCE is normally accomplished by evaluating test data of the investigation EPCE input circuitry (in some instances this data can be in the form of manufacturing data).

The inspection will be based on physical/visual inspection of the investigation EPCE. The inspection will be considered successful when physical/visual indications show the labeling of investigation EPCE susceptible to ESD up to 15, 000 Volts are in accordance with MIL-STD-1686A. (Inspection results should be included in the test or analysis report.)

| Required Verification Data: | Data Submittal Dates: |
|---|---|
| 1. A report on test results or an analysis showing compliance with MSFC-RQMT-2888, paragraph 3.2.4.5. | 1. L-10 |
| 2. Certificate of compliance (COC) showing that the inspection identifies labeling of the investigation EPCE. | 2. L-10 |

| Description of Reverification Requirements: | Reverification Method: | Hazard Report(s): |
|---|---|---|
| See section 5.3 for details. | | |

| Required Reverification Data: | Data Submittal Dates: |
|---|---|
| | |

Applicable Document(s):
MIL-STD-1686
SSP 57000, par. 3.2.4.5
NSTS.1700.7

Verification Definition Sheets

| Number | Title | Purpose | Method | Hazard Report(s) |
|---|---|---|---|---|
| IIT-EL-026 | ELECTRICAL - ARC CONTAINMENT | ISS | A | |

MSFC-RQMT-2888 Paragraph Number(s), Title(s), and Method(s):
3.10.3.3.6 ARC Containment (A)

Requirement Summary:

Electrical connector plugs must confine or isolate the electrical arcs or sparks associated with mating and demating.

Detailed Descriptions of Requirements:
Arc containment shall be verified by analysis. Verification shall be considered successful when an analysis of the flight hardware drawings shows that electrical connector plugs confine/isolate the mate/demate electrical arcs or sparks.

| Required Verification Data: | Data Submittal Dates: |
|---|---|
| 1. Certificate of Compliance (COC). | 1. L-8 |

| Description of Reverification Requirements: | Reverification Method: | Hazard Report(s): |
|---|---|---|
| See section 5.3 for details. | | |

| Required Reverification Data: | Data Submittal Dates: |
|---|---|
| | |

Applicable Document(s):
SSP 57000, par. 3.12.4.3.7
NSTS 1700.7

| Number | Title | Purpose | Method | Hazard Report(s) |
|---|---|---|---|---|
| IIT-EL-029 | ELECTRICAL - POWER SWITCHES/CONTROLS | ISS | A | |

MSFC-RQMT-2888 Paragraph Number(s), Title(s), and Method(s):

3.2.5.3.a Power Switches/Controls (A)
3.2.5.3.b Power Switches/Controls (A)
3.2.5.3.c Power Switches/Controls (A)

Requirement Summary:

These requirements protect the ISS and its crew from accidents related to electrical shock. Power on/off switches/controllers must indicate when all electrical connections with the power supply are discontinued. If the power supply is not completely disconnected, then a crewmember should be able to determine this by examining the indicators. While in the power-off position, all power supply conductors (except the power return and grounding conductor) must be open (dead-faced).

Detailed Descriptions of Requirements:

a. Switches/controls requirements shall be verified by analysis. An analysis shall be performed to ensure that the switches/controls performing on/off functions for all power interfaces open (dead-face) all supply circuit conductors, except the power return and equipment grounding conductor, while in the power-off position. Verification shall be considered successful when analysis of electrical circuit schematics shows that the switches/controls performing on/off power functions, all power interfaces open (dead-face) all supply conductors except the power return and equipment grounding conductor, while in the power-off position.

b. Power-off markings and/or indications requirement shall be verified by analysis. The analysis shall ensure that power-off markings and/or indications exist when all electrical connections with the power supply circuit are disconnected. The verification shall be considered successful when analysis shows that power switches/controls power-off markings and/or indication(s) exist when all electrical connections with the power supply circuit are disconnected.

c. Standby, charging, and descriptive nomenclature requirement shall be verified by analysis. The analysis shall ensure the existence of descriptive nomenclature such as standby, charging, or whatever is necessary to indicate that the power supply circuit is not completely disconnected. The verification shall be considered successful when analysis shows descriptive nomenclature exists to indicate that the power supply circuit is not completely disconnected.

| Required Verification Data: | Data Submittal Dates: |
|---|---|
| 1. Certificate of Compliance (COC). | 1. L-8 |

| Description of Reverification Requirements: | Reverification Method: | Hazard Report(s): |
|---|---|---|
| See section 5.3 for details. | | |

| Required Reverification Data: | Data Submittal Dates: |
|---|---|
| | |

Applicable Document(s):

SSP 57000, par. 3.2.5.3

NSTS.1700.7

Verification Definition Sheets

| Number | Title | Purpose | Method | Hazard Report(s) |
|---|---|---|---|---|
| IIT-EL-030 | ELECTRICAL - GROUND FAULT CIRCUIT INTERRUPTERS | ISS | A&D&T | |

MSFC-RQMT-2888 Paragraph Number(s), Title(s), and Method(s):
Deleted

Requirement Summary:

Deleted

Detailed Descriptions of Requirements:

Deleted

| Required Verification Data: | Data Submittal Dates: |
|---|---|
| 1. Certificate of Compliance (COC). | 1. L-8 |

| Description of Reverification Requirements: | Reverification Method: | Hazard Report(s): |
|---|---|---|
| See section 5.3 for details. | | |

| Required Reverification Data: | Data Submittal Dates: |
|---|---|
| | |

Applicable Document(s):

SSP 57000, par. 3.2.5.4 and table 3.2.5.4-1

| Number | Title | Purpose | Method | Hazard Report(s) |
|---|---|---|---|---|
| IIT-EL-033 | ELECTRICAL – RS422/ETHERNET CABLE CHARACTERISTICS | IIT | I | |

MSFC-RQMT-2888 Paragraph Number(s), Title(s), and Method(s):
3.3.3.3 RS422 Cable Characteristics (I)
3.3.5.1.6 Ethernet Cable Characteristics (I)

Requirement Summary:

Medium-Rate Data Link (MRDL) cables must meet ISS requirements.

Detailed Descriptions of Requirements:

Verification shall be by inspection of the investigation RS422 or Ethernet cable. Verification shall be considered successful when it is shown that the investigation RS422 or Ethernet cable meets the requirements as specified in SSQ 21655 or equivalent for 100 ohm characteristic impedance wire. Equivalent specifications must address the low attenuation, reliability, and environmental requirements as specified in SSQ 21655. Vendor documentation of wire qualification to SSQ 21655 or equivalent can be used to perform this verification.

| Required Verification Data: | Data Submittal Dates: |
|---|---|
| 1. Certificate of Compliance (COC). | 1. L-8 |

| Description of Reverification Requirements: | Reverification Method: | Hazard Report(s): |
|---|---|---|
| See section 5.3 for details. | | |

| Required Reverification Data: | Data Submittal Dates: |
|---|---|
| | |

Applicable Document(s):

SSP 57000, par. 3.3.6.1.6
SSQ 21655

Verification Definition Sheets

| Number | Title | Purpose | Method | Hazard Report(s) |
|---|---|---|---|---|
| IIT-EL-037 | ELECTRICAL - SPOTLIGHT INTERFACE REQ. | IIT | D&I&T | |

MSFC-RQMT-2888 Paragraph Number(s), Title(s), and Method(s):
3.7.2.3.1.a - d Spotlight Interface Requirements (D & I & T)

Requirement Summary:

The investigation spotlight must be compatible with MSG requirements.

Detailed Descriptions of Requirements:

A. Connector and Pin Assignments

i. Verification of the spotlight connector of the investigation physical mating to the MSG connector shall be by demonstration. The verification shall be considered successful when the demonstration shows that the investigation connectors can physically mate with the MSG connectors with the part number as specified in MSFC-RQMT-2888, Paragraph 3.7.2.3.1.a.

ii. Verification of appropriate pin assignment shall be by inspection. Inspection of payload drawings shall be used to verify that the P1 pinouts match the corresponding J1 pinouts. The verification shall be considered successful when the inspection shows that the P1 connector pinout is appropriate as specified in MSFC-RQMT-2888 Tables XXVII and XXVIII.

B. Power Rating

Verification that the investigation spotlight does not exceed the power rating of 12V at 2 amps shall be by test. The verification shall be considered successful when test shows that the investigation complies with requirements defined in MSFC-RQMT-2888, Paragraph 3.7.2.3.1.b.

C. Other

Verification that the spotlight shall not be covered when on shall be by inspection. The verification shall be considered successful when inspection shows that the spotlight is not covered when on. Investigation spotlight shall meet the bonding requirements of EL-22.

NOTE: The demonstration can be closed during physical or functional testing using either the EU or GU.

| Required Verification Data: | Data Submittal Dates: |
|---|---|
| 1. Certificate of Compliance (COC). | 1. L-8 |

| Description of Reverification Requirements: | Reverification Method: | Hazard Report(s): |
|---|---|---|
| See section 5.3 for details. | | |

| Required Reverification Data: | Data Submittal Dates: |
|---|---|
| | |

Applicable Document(s):

| Number | Title | Purpose | Method | Hazard Report(s) |
|---|---|---|---|---|
| IIT-EL-041 | ELECTRICAL – ELECTRICAL HAZARDS | ISS | A or T | |

MSFC-RQMT-2888 Paragraph Number(s), Title(s), and Method(s):

3.10.8.1.b,.c,.d,.e Crew Safety Electrical Hazards

Requirement Summary:

These requirements ensure that proper hazard controls are in place.

Detailed Descriptions of Requirements:

For equipment other than bio-instrumentation equipment, verification of hazard controls shall be analysis or test. The analysis or test shall: 1). Define the maximum voltage and current profiles to which a crewmember might be exposed by the worst case combination of credible failures, events, and/or environments the equipment might experience, and 2). Show that the crew is protected by the controls incorporated in the equipment. Verification shall be considered successful when it shows that the appropriate requirements from the following list are satisfied:

· The exposure condition exceeds the threshold for shock, but is below the threshold of the let-go current profile (critical hazard) as defined in MSFC-RQMT-2888, Table XVI, and two independent controls (e.g., a safety (green) wire, bonding, insulation, leakage current levels below maximum requirements) are provided. In addition, design of the controls is such that no single failure, event, or environment can eliminate more than one control.

· The exposure condition exceeds both the threshold for shock and the threshold of the let-go current profile (catastrophic hazardous events) as defined in MSFC-RQMT-2888, Table XVI, and three independent controls are provided. In addition, the design of the controls is such that no combination of two failures, events, or environments can eliminate more than two controls.

· If two dependent controls are provided, the physiological effect that a crewmember experiences as a result of the combinations of the highest internal voltage applied to or generated within the equipment and the frequency and wave form associated with a worst case credible failure is below the threshold of the let-go current profile as defined in MSFC-RQMT-2888, Table XVI.

· If the analysis fails to clearly define the exposure condition that a crewmember might experience, three independent hazard controls are provided and the design of the controls is such that no combination of two failures, events, or environments can eliminate more than one control.

| Required Verification Data: | Data Submittal Dates: |
|---|---|
| 1. Certificate of Compliance (COC). | 1. L-8 |

| Description of Reverification Requirements: | Reverification Method: | Hazard Report(s): |
|---|---|---|
| See section 5.3 for details. | | |

| Required Reverification Data: | Data Submittal Dates: |
|---|---|
| | |

Applicable Document(s):
SSP-5700, par. 3.12.9.1 and Table 3.2.5.4-1
NSTS.1700.7

Verification Definition Sheets

| Number | Title | Purpose | Method | Hazard Report(s) |
|---|---|---|---|---|
| IIT-CD-01 | C&DH – RS-422 PROTOCOL, SIGNAL CHARACTERISTICS AND CABLING CHARACTERISTICS | IIT | I&T | |

MSFC-RQMT-2888 Paragraph Number(s), Title(s), and Method(s):

3.3.1.1.1 through 3.3.1.1.3 RS-422 Protocol (T) 3.3.3.2 RS-422 Signal Characteristics (I)

3.3.3.3 Wiring Characteristics (I)

Requirement Summary:

The RS-422 protocol, signal characteristics and cabling characteristics must comply with EIA RS-422.

Detailed Descriptions of Requirements:

Test verification of the investigation hardware shall be performed using the MSG flight unit or equivalent to insure the RS-422 protocol are in accordance with Sections 3.3.1.1.1 through 3.3.1.1.3.

Inspection of the investigation drawings shall be done to determine that the correct RS-422 components are used to meet the requirements in Section 3.3.3.2.

Inspection of the investigation wiring drawings shall be done to determine that the wiring characteristics for the RS-422 cable meets the wiring characteristics requirement in Section 3.3.3.3.

NOTE: The test can be closed during functional testing using the MSG flight unit or equivalent.

| Required Verification Data: | Data Submittal Dates: |
|---|---|
| 1. COC for test | 1. L-8 |
| 2. COC for inspection | 2. L-8 |

| Description of Reverification Requirements: | Reverification Method: | Hazard Report(s): |
|---|---|---|
| See section 5.3 for details. | | |

| Required Reverification Data: | Data Submittal Dates: |
|---|---|
| | |

Applicable Document(s):

MSFC-HDBK-3141

MSFC-RQMT-3098

| Number | Title | Purpose | Method | Hazard Report(s) |
|---|---|---|---|---|
| IIT-CD-02 | C&DH – PROTOCOL FOR COMMANDING, HEALTH & STATUS, CAUTION AND WARNING | IIT | T | |

MSFC-RQMT-2888 Paragraph Number(s), Title(s), and Method(s):

3.3.1.1.4 Command Acknowledges and Log Messages (T) 3.3.1.1.6 Health and Status (T) 3.3.1.1.5 Commanding (T)
3.3.1.1.7 Safety Data (T) 3.3.1.1.8 File Transfer (T) 3.3.1.1.9 Illegal Commands (T)

Requirement Summary:

The protocols for Standard Messages, Commanding, Health & Status, Caution & Warning, File Transfer and Illegal Commands must comply with the MSG requirements.

Detailed Descriptions of Requirements:

Test verification of the investigation shall be performed using MSG flight unit or equivalent to insure the protocols for Standard Messages, Commanding, Health & Status, Illegal Commands, File Transfer and Caution & Warning are in accordance with Sections 3.3.1.1.4, 3.3.1.1.4, 3.3.1.1.5, 3.3.1.1.7, 3.3.1.1.8 and 3.3.1.1.9

Testing shall be considered successful when the Investigation hardware receives commands and transmits Command Acknowledges and Log Messages to the PRCU or PTCS. Testing shall be considered successful when the Investigation hardware sends health & status data, safety data and can perform file transfer to the PRCU or PTCS.

NOTE: The test can be closed during functional testing using the MSG flight unit or equivalent.

| Required Verification Data: | Data Submittal Dates: |
|---|---|
| 3. COC for test | 3. L-8 |
| 4. COC for inspection | 4. L-8 |

| Description of Reverification Requirements: | Reverification Method: | Hazard Report(s): |
|---|---|---|
| See section 5.3 for details. | | |

| Required Reverification Data: | Data Submittal Dates: |
|---|---|
| | |

Applicable Document(s):

MSFC-HDBK-3141

MSFC-RQMT-3098, NSTS.1700.7

Verification Definition Sheets

| Number | Title | Purpose | Method | Hazard Report(s) |
|---|---|---|---|---|
| IIT-CD-03 | C&DH – I/O SIGNAL LEVELS AND RESOLUTION | IIT | T&A | |

MSFC-RQMT-2888 Paragraph Number(s), Title(s), and Method(s):

3.3.4 Investigation Input/Output (I/O) Interface (T)

Requirement Summary:

The I/O interface must comply with the MSG signal levels and resolution.

Detailed Descriptions of Requirements:

Test verification of the investigation hardware shall be performed using the MSG flight unit or equivalent to insure the I/O signal levels and resolution are in accordance with Sections 3.3.4.

Test or analysis of Investigation hardware shall be performed to determine that the correct signal levels are complied with in Section 3.3.4 prior to testing with the MSG flight unit or equivalent.

NOTE: The test can be closed during functional testing using the MSG flight unit or equivalent.

| Required Verification Data: | Data Submittal Dates: |
|---|---|
| 1. COC for test | 1. L-8 |
| 2. Analysis or test data | 2. 2 weeks prior to test |

| Description of Reverification Requirements: | Reverification Method: | Hazard Report(s): |
|---|---|---|
| See section 5.3 for details. | | |

| Required Reverification Data: | Data Submittal Dates: |
|---|---|
| | |

Applicable Document(s):

MSFC-RQMT-2888

| Number | Title | Purpose | Method | Hazard Report(s) |
|---|---|---|---|---|
| IIT-CD-10 | C&DH - ETHERNET PROTOCOL AND SIGNAL CHARACTERISTICS | ISS | T | |

MSFC-RQMT-2888 Paragraph Number(s), Title(s), and Method(s):

3.3.5.1 MRDL Protocol (T)

3.3.5.1 Investigation Protocols on the MRDL (T)

Requirement Summary:

The Ethernet/Medium-Rate Data Link (MRDL) protocol must comply with ISO/IEC 8802-3 Pics Proforma for 10 Base T.

Detailed Descriptions of Requirements:

Test verification of the investigation hardware shall be performed using an Ethernet network analyzer to insure the MRDL protocol is in accordance with the ISO/IEC 8802-3 Pics Proforma for 10 Base T.

Note: PRCU can provide a port for correct routing of messages.

| Required Verification Data: | Data Submittal Dates: |
|---|---|
| 1. Test report | 1. L-8 |

| Description of Reverification Requirements: | Reverification Method: | Hazard Report(s): |
|---|---|---|
| See section 5.3 for details. | | |

| Required Reverification Data: | Data Submittal Dates: |
|---|---|
| | |

Applicable Document(s):

ISO/IEC 8802-3 (Entire Document)

SSP 52050, Section 3.3.3 & SSP 57000, par. 3.3.6.1, and 3.3.6.1.1

Verification Definition Sheets

| Number | Title | Purpose | Method | Hazard Report(s) |
|---|---|---|---|---|
| IIT-CD-11 | C&DH - ETHERNET CONNECTIVITY AND ADDRESSING | ISS | I&T | |

MSFC-RQMT-2888 Paragraph Number(s), Title(s), and Method(s):

3.3.5.1.2 MRDL Address (T)

3.3.5.1.3 ISPR MRDL Connectivity (I&T)

Requirement Summary:

The Ethernet/Medium-Rate Data Link (MRDL) must have proper connectivity to Local Area Networks (LAN), and the addressing must allow software commands and data to be received by the intended recipient.

Detailed Descriptions of Requirements:

A. MRDL Address: Verification of the investigation Ethernet LAN 2 unique address shall be by analysis and test. The analysis shall verify that the unique numbers were issued by IEEE or their representative. The test of the investigation shall verify that the investigation correctly implement the Ethernet protocol with the Ethernet network analyzer. The verification for the investigation shall be considered successful when traceability of addresses to IEEE has been shown and when the protocol meets the requirements of ISO/IEC 8802-3 Pics Proforma for 10 Base T, using an Ethernet network analyzer. Verification of MAC address shall be set prior to the Ethernet terminal going active shall be by test. The test shall verify that the investigation correctly implements the Ethernet protocol with Ethernet network analyzer. The verification shall be considered successful when the protocol meets the requirements of ISO/IEC 8802-3 Pics Proforma for 10 Base T, using an Ethernet network analyzer. This test may be combined with the tests described in the previous paragraph of this VDS.

B. Ethernet Connectivity: Verification of the investigation Ethernet connectivity shall be by inspection. The inspection shall be considered successful when it is shown that the investigation drawings conform to Unique Investigation ICD. Verification of MRDL data routing shall be by test. The test shall be accomplished with the PRCU or equivalent. The test shall be considered successful when it is shown that Ethernet data can be successfully routed to the proper ISS LAN with the correct Ethernet address.

Note: PRCU can be used to route MRDL data from the system emulators to the payload a well as routing MRDL data from the payload to the system emulators.

| Required Verification Data: | Data Submittal Dates: |
|---|---|
| 1. Test report and Certificate of Compliance (COC) stating compliance with Ethernet protocol. | 1. L-12 |
| 2. COC for Item B. | 2. L-8 |

| Description of Reverification Requirements: | Reverification Method: | Hazard Report(s): |
|---|---|---|
| See section 5.3 for details. | | |

Continued on next page

| Number | Title | Purpose | Method | Hazard Report(s) |
|---|---|---|---|---|
| IIT-CD-11 | C&DH - ETHERNET CONNECTIVITY AND ADDRESSING | ISS | I&T | |

Continued from previous page

| Required Reverification Data: | Data Submittal Dates: |
|---|---|
| | |

Applicable Document(s):

SSP 52050, par.3.3.6

SSP 57000, par. 3.3.6.1.2 and 3.3.6.1.3

SSP 57001, Tables 3.3.2.2-1 and 3.3.2.2-2

SSP 57002, Tables 3.1.2.2-1 and 3.1.2.2-2

SSP 57300 Software ICD Series Document

Verification Definition Sheets

| Number | Title | Purpose | Method | Hazard Report(s) |
|---|---|---|---|---|
| IIT-CD-12 | C&DH - EHTERNET CABLE CHARACTERISTICS | ISS | I&T | |

MSFC-RQMT-2888 Paragraph Number(s), Title(s), and Method(s):

3.3.5.1.5 MRDL Signal Characteristics (I&T)

3.3.5.1.6.1 Insertion Loss (T)

3.3.5.1.6.2 Differential Characteristic Impedance (T)

3.3.5.1.6.3 Medium Timing Jitter (T)

Requirement Summary:

The Ethernet/Medium-Rate Data Link (MRDL) cable characteristics (signal characteristics, insertion losses, Differential Characteristic Impedance, and Medium Timing Jitter) must meet specific industry standards.

Detailed Descriptions of Requirements:

The inspection of the investigation Ethernet signal characteristics will be complete when it is determined it conforms to section 14.2.1 of ISO/IEC 8802-3 with the exception stated in paragraph 3.3.5.1.5. Note: work with IIT on S/W ICD.

The test of the investigation Ethernet signal characteristics will be complete when it is determined it conforms to section 14.4.2.1 of ISO/IEC 8802-3, 1994, with the exception that the wire meets Table XXVIII.

The test of the investigation Ethernet Differential Characteristic Impedance will be complete when it is determined it conforms to section 14.4.2.2 of ISO/IEC 8802-3, 1994, with the exception that the wire meets Table XXVIII.

The test of the investigation Ethernet Medium Timing Jitter will be complete when it is determined it conforms to section 14.4.2.3 of ISO/IEC 8802-3, 1994, with the exception that the wire meets Table XXVIII.

Note: PRCU can provide a port for correct routing of messages.

| Required Verification Data: | Data Submittal Dates: |
|---|---|
| 1. Test report and Certificate of Compliance (COC) stating compliance with Ethernet signal characteristics.<br>2. Certificate of Compliance (COC) for inspection | 1. L-12<br>2. L-8 |

| Description of Reverification Requirements: | Reverification Method: | Hazard Report(s): |
|---|---|---|
| See section 5.3 for details. | | |

| Required Reverification Data: | Data Submittal Dates: |
|---|---|
| Continued on next page | |

| Number | Title | Purpose | Method | Hazard Report(s) |
|---|---|---|---|---|
| IIT-CD-12 | C&DH - EHTERNET CABLE CHARACTERISTICS | ISS | I&T | |

Continued from previous page

Applicable Document(s):

ISO/IEC 8802-3, par. 14.2.1, 14.4.2.1, 14.4.2.2, and 14.4.2.3

SSP 57000, par. 3.3.6, 3.3.6.1.5, 3.3.6.1.6.1, 3.3.6.1.6.2, and 3.3.6.1.6.3; Table 3.3.6.1.6-I

SSP 57300 Software ICD Series Document

Verification Definition Sheets

| Number | Title | Purpose | Method | Hazard Report(s) |
|---|---|---|---|---|
| IIT-CD-07 | C&DH – MSG LAPTOP COMPUTER (MLC) | IIT | I&T | |

MSFC-RQMT-2888 Paragraph Number(s), Title(s), and Method(s):

3.3.1.1.1 through 3.3.1.1.3 MSG (MLC) Software Protocol (I&T) 3.3.6.1.1 MSG Serial Data Port (I)

3.3.6.1.2 MSG Parallel Port (I)

Requirement Summary:

This requirement ensures that the investigation will function properly with MLC.

Detailed Descriptions of Requirements:

Test verification of the investigation software shall be performed using a MLC ground unit to insure the investigation provided software and protocol is in accordance with Section 3.3.1.1.1 thru 3.3.1.1.3 when using the RS-232 interface and Section 3.3.6.1.2 when using the parallel port.

An inspection shall be performed of the investigation connectors to ensure they comply with the interface defined in the Unique Investigation ICD.

NOTE: The test can be closed during functional testing using the MLC ground unit and the MSG flight unit or equivalent.

| Required Verification Data: | Data Submittal Dates: |
|---|---|
| 1. COC for test | 1. L-9 |
| 2. COC inspection | 3. L-8 |

| Description of Reverification Requirements: | Reverification Method: | Hazard Report(s): |
|---|---|---|
| See section 5.3 for details. | | |

| Required Reverification Data: | Data Submittal Dates: |
|---|---|
| | |

Applicable Document(s):

MSFC-HDBK-3141

MSFC-RQMT-3098

| Number | Title | Purpose | Method | Hazard Report(s) |
|---|---|---|---|---|
| IIT-CD-08 | C&DH - VIDEO INTERFACE REQ. | IIT | T&I, AorT | |

MSFC-RQMT-2888 Paragraph Number(s), Title(s), and Method(s):
3.3.7 Investigation Video Interface (T&I) (AorT)

Requirement Summary:

These requirements ensure that investigation video interface conform to the MSG video system.

Detailed Descriptions of Requirements:

Testing & inspection shall be performed to verify that the investigation video interface characteristics are in accordance with MSFC-RQMT-2888, Table XXVI Video Connector Contact Assignments. The verification shall be considered successful when an inspection of the investigation video connector shows compliance with MSFC-RQMT-2888, Paragraph 3.3.7. Testing shall be done with the facility to insure compatibility with the MSG video system.

Analysis or test shall be performed on investigation provided cameras to insure that the power consumption of the camera does not exceed 7.8 watts. The verification shall be considered successful when the analysis or test shows compliance with MSFC-RQMT-2888, Paragraph 3.3.7.

Investigations shall provide a C.O.C. stating that the cameras provided by the investigation are National Television Committee (NTSC) video standard EIA RS –170A cameras.

NOTE: The test can be closed during functional testing using the MSG flight unit or equivalent.

| Required Verification Data: | Data Submittal Dates: |
|---|---|
| 1. Certificate of Compliance (COC) for test or analysis. | 1. L-9 |
| 2. Certificate of Compliance (COC) for inspection. | 2. L-8 |
| 3. Certificate of Compliance (COC) for NTSC video standard. | 3. L-8 |

| Description of Reverification Requirements: | Reverification Method: | Hazard Report(s): |
|---|---|---|
| See section 5.3 for details. | | |

| Required Reverification Data: | Data Submittal Dates: |
|---|---|
| | |

Applicable Document(s):

Verification Definition Sheets

| Number | Title | Purpose | Method | Hazard Report(s) |
|---|---|---|---|---|
| IIT-FD-001 | FLUID DYNAMICS – PHYSICAL INTERFACE | ISS | A | |

MSFC-RQMT-2888 Paragraph Number(s), Title(s), and Method(s):
3.10.3.3.9 Fluid and Gas Line Connectors (A)

Requirement Summary:

Connectors of investigation hardware requiring liquid or gas cooling provisions must interface properly, and allowances must be given for access and inspection of the interface components.

Detailed Descriptions of Requirements:

A. Fluid and gas line connectors that are mated and demated on-orbit shall be verified by analysis. Verification shall be considered successful when an analysis of payload flight hardware drawings shows that fluid and gas connectors that are mated and demated on-orbit are located and configured so that they can be fully inspected for leakage.

| Required Verification Data: | Data Submittal Dates: |
|---|---|
| 1. Certificate of Compliance (COC). | 1. L-8 |

| Description of Reverification Requirements: | Reverification Method: | Hazard Report(s): |
|---|---|---|
| See section 5.3 for details. | | |

| Required Reverification Data: | Data Submittal Dates: |
|---|---|
| | |

Applicable Document(s):

SSP 57000, par. 3.1.1.6.1, 3.5.1.1, 3.12.4.3.10, and Table 3.1.1.6.1-1

NSTS 1700.7

| Number | Title | Purpose | Method | Hazard Report(s) |
|---|---|---|---|---|
| IIT-FD-002 | FLUID DYNAMICS – AIR CIRCULATION SYSTEM | IIT | A&T | |

MSFC-RQMT-2888 Paragraph Number(s), Title(s), and Method(s):
3.4.1.1 WV Air Circulation System (T&A)

Requirement Summary:

These requirements ensure that the Air Handling Unit (AHU) heat exchanger is capable of removing the air heat load of the investigation temperature range.

Detailed Descriptions of Requirements:
Verification of investigation heat dissipation to the work volume air shall be by test and analysis. The investigation power draw test data shall be used to determine if the AHU heat exchanger is capable of removing the investigation dissipated heat load. Verification shall be considered successful when the analysis shows that the heat loads defined in the Unique Investigation Hardware ICD are not exceeded. Investigations requiring the AHU heat exchanger to dissipate 150 watts or more shall be required to perform an integrated test with the facility as specified in MSFC-RQMT-2888, Paragraph 3.4.1.1.

Note: The EU shall be used for the test and can be accomplished as part of the integrated testing.

| Required Verification Data: | Data Submittal Dates: |
|---|---|
| 1. Certificate of Compliance (COC). | 1. L-8 |
| 2. Note Integrated test will be performed by. | 2. L-9 |

| Description of Reverification Requirements: | Reverification Method: | Hazard Report(s): |
|---|---|---|
| See section 5.3 for details. | | |

| Required Reverification Data: | Data Submittal Dates: |
|---|---|
| | |

Applicable Document(s):

Verification Definition Sheets

| Number | Title | Purpose | Method | Hazard Report(s) |
|---|---|---|---|---|
| IIT-FD-003 | FLUID DYNAMICS – COLDPLATE MOUNTING REQ. | IIT | T&I & A | |

MSFC-RQMT-2888 Paragraph Number(s), Title(s), and Method(s):
3.4.1.2.1.a,b,c,d,e Investigation Coldplate Mounting Requirements (T&I&A)

Requirement Summary:

Investigation coldplate interface must be compatible with the following requirements.

Detailed Descriptions of Requirements:

A. Verification of investigation coldplate mounting surface flatness shall be by inspection. Inspection of investigation drawings that the coldplate mounting surface provides a 0.1 mm flatness and a surface finish of 125 microinches on the surface in contact with the coldplate. The verification shall be considered successful when the inspection shows that the mounting surface meet the requirement as specified in MSFC-RQMT-2888 Paragraph 3.4.1.2.1.a.

B. Verification of the bolts used to attach the investigation to the coldplate are torqued to the proper values shall be by inspection. The verification shall be considered successful when the inspection of the crew procedures show that the torque values meet the requirement as specified in MSFC-RQMT-2888 Paragraph 3.4.1.2.1.b.

C. Verification of investigation heat distribution shall be by analysis. The analysis shall show that the investigation provides, to the maximum extent possible, an equal heat distribution over the coldpate surface as specified in MSFC-RQMT-2888 Paragraph 3.4.1.2.1.c.

D. Verification of investigation heat dissipation shall be analysis. The analysis shall insure that the investigation heat dissipation is under the MSG limit as specified in MSFC-RQMT-2888 Paragraph 3.4.1.2.1.d, and the heat loads defined in the Unique Investigation Hardware ICD are not exceeded. Investigations requiring the MSG coldplate to dissipate 600 watts or more shall perform an integrated test with the facility as specified in MSFC-RQMT-2888 Paragraph 3.4.1.2.1.e.

E.

Note: The EU shall be used for the test and can be accomplished as part of the integrated testing.

| Required Verification Data: | Data Submittal Dates: |
|---|---|
| 1. Certificate of Compliance (COC). | 1. L-8 |
| 2. Integrated test will be performed by. | 2. L-9 |

| Description of Reverification Requirements: | Reverification Method: | Hazard Report(s): |
|---|---|---|
| See section 5.3 for details. | | |

| Required Reverification Data: | Data Submittal Dates: |
|---|---|
| | |

Applicable Document(s):

| Number | Title | Purpose | Method | Hazard Report(s) |
|---|---|---|---|---|
| IIT-FD-014 | FLUID DYNAMICS - VES PHYSICAL INTERFACE | IIT | D&T | |

MSFC-RQMT-2888 Paragraph Number(s), Title(s), and Method(s):
3.5.1.1 VES Physical Interface (D & T)

Requirement Summary:

The investigation Vacuum Exhaust System (VES) mechanical connector must mate correctly.

Detailed Descriptions of Requirements:

A. Verification that the investigation VES connector, as specified in MSFC-RQMT-2888, Paragraph 3.5.1.1.a, physically mates with the corresponding MSG connector shall be by demonstration. The demonstration shall use the MSG ground facility to verify that the VES connectors physically mate. The verification shall be considered successful when the demonstration shows the investigation connector physically mates with its corresponding MSG facility connector.

B. Verify by test that the leak rate at the connector interface is less than $2 \times 10^{-3}$ scc/sec as specified in MSFC-RQMT-2888, Paragraph 3.5.1.1.b.

C. Verify by demonstration that the investigation provides two additional controls to stop the flow of gases when connected to the VES system.

D. Verify by test that the investigation will not block the flow of gases when connected to the VES system.

E. Gases vented to the VES system shall be within the restrictions as defined in VDS sheets FD-018, FD-019 and FD-020.

NOTE: The demonstration can be closed during physical or functional testing using either the EU or GU.

| Required Verification Data: | Data Submittal Dates: |
|---|---|
| 1. Certificate of Compliance (COC). | 1. L-8 |

| Description of Reverification Requirements: | Reverification Method: | Hazard Report(s): |
|---|---|---|
| See section 5.3 for details. | | |

| Required Reverification Data: | Data Submittal Dates: |
|---|---|
| | |

Applicable Document(s):

Verification Definition Sheets

| Number | Title | Purpose | Method | Hazard Report(s) |
|---|---|---|---|---|
| IIT-FD-015 | FLUID DYNAMICS - VES INPUT PRESSURE LIMIT | ISS | A&T | |

MSFC-RQMT-2888 Paragraph Number(s), Title(s), and Method(s):

3.5.1.2.a Input Pressure Limit (T)
3.5.1.2.b Input Pressure Limit (A&T)
3.5.1.2.c Input Pressure Limit (A)

Requirement Summary:

The investigation vacuum interface must be able to withstand a specified maximum pressure at the VES mechanical connection. The investigation shall also be two failures tolerant to protect against failure conditions that would exceed VES maximum design pressure of 40 psia.

Detailed Descriptions of Requirements:

The investigation volumes shall be able to withstand a maximum pressure of 40 psia as specified in MSFC-RQMT-2888, paragraph 3.5.1.2.a and paragraph 3.5.1.2.b.

A. Investigation vented gas pressure shall be verified by test. The test shall utilize a PRCU, or equivalent, to measure the vented gas pressure at the interface plane. The investigation volumes that are connected to VES shall be pressurized to the expected experiment pressures for the test. (Since the PRCU does not provide positive pressures, the investigation volumes that are connected to the VES shall be pre-pressurized to the expected experiment pressure for the test.)

B. The MDP of integrated rack volumes connected to the VES shall be verified by the test and analysis guidelines as specified in MSFC-RQMT-2888 Paragraph 3.5.1.2.b. (Note: The PRCU does not proof-test.)

C. Verify by analysis that the investigation system (including the chamber) provides a two fault tolerant design to prevent venting gases at pressures greater than 276 kPa (40 psia) at the interface. Verification shall be considered successful when the analysis shows the investigation system provides a two fault tolerant design to prevent venting gases to the VRS system at pressures at the interface as specified in MSFC-RQMT-2888, Paragraph 3.5.1.2.c.

NOTE: The test can be closed during physical or functional testing using either the EU or GU.

| Required Verification Data: | Data Submittal Dates: |
|---|---|
| 1. Certificate of Compliance (COC). | 1. L-8 |

| Description of Reverification Requirements: | Reverification Method: | Hazard Report(s): |
|---|---|---|
| See section 5.3 for details. | | |

| Required Reverification Data: | Data Submittal Dates: |
|---|---|
| | |

Applicable Document(s):

SSP 52005, par. 5.1.3
SSP 57000, par. 3.6.1.2
SSP 57001, par. 3.6.1
NSTS.1700.7

| Number | Title | Purpose | Method | Hazard Report(s) |
|---|---|---|---|---|
| IIT-FD-016 | FLUID DYNAMICS - VES INPUT TEMPERATURE LIMIT | ISS | T | |

MSFC-RQMT-2888 Paragraph Number(s), Title(s), and Method(s):
3.5.1.3 Input Temperature Limit (T)

Requirement Summary:

The temperature of the investigation vacuum exhaust mechanical interface must be below a specified limit.

Detailed Descriptions of Requirements:

Integrated rack vent exhaust temperature shall not exceed limits as specified in MSFC-RQMT-2888, Paragraph 3.5.1.3 and will be verified by test. The test shall utilize a PRCU, or equivalent, to measure the initial temperature at the interface plane. The investigation volumes that are connected to VES shall be pressurized to the expected pressures for the test. The investigation shall be subjected to the same heat generating operations that will be experienced on–orbit and vented at the same relative time during the experiment operation as would be experienced on–orbit.

NOTE: The test can be closed during physical or functional testing using either the EU or GU.

| Required Verification Data: | Data Submittal Dates: |
|---|---|
| 1. Certificate of Compliance (COC). | 1. L-8 |

| Description of Reverification Requirements: | Reverification Method: | Hazard Report(s): |
|---|---|---|
| See section 5.3 for details. | | |

| Required Reverification Data: | Data Submittal Dates: |
|---|---|
| | |

Applicable Document(s):

SSP 57000, par. 3.6.1.3

Verification Definition Sheets

| Number | Title | Purpose | Method | Hazard Report(s) |
|---|---|---|---|---|
| IIT-FD-017 | FLUID DYNAMICS - VES INPUT DEWPOINT LIMIT | ISS | T | |

MSFC-RQMT-2888 Paragraph Number(s), Title(s), and Method(s):
3.5.1.4 Input Dewpoint Limit (T)

Requirement Summary:

The dewpoint of the investigation vacuum exhaust mechanical interface must be below a specified limit.

Detailed Descriptions of Requirements:

Investigation vent exhaust dewpoint temperature shall not exceed the limits as specified in MSFC-RQMT-2888, Paragraph 3.5.1.4 and will be verified by test. The test shall utilize a PRCU, or equivalent, to measure the initial dewpoint at the interface plane. The investigation volumes that are connected to VES shall be pressurized to the expected pressures for the test. The investigation shall be subjected to the same operations that will be experienced on–orbit and vented at the same relative time during the investigation operation as would be experienced on–orbit.

NOTE: The test can be closed during physical or functional testing using either the EU or GU.

| Required Verification Data: | Data Submittal Dates: |
|---|---|
| 1. Certificate of Compliance (COC). | 1. L-8 |

| Description of Reverification Requirements: | Reverification Method: | Hazard Report(s): |
|---|---|---|
| See section 5.3 for details. | | |

| Required Reverification Data: | Data Submittal Dates: |
|---|---|
| | |

Applicable Document(s):

SSP 57000, par. 3.6.1.4

| Number | Title | Purpose | Method | Hazard Report(s) |
|---|---|---|---|---|
| IIT-FD-018 | FLUID DYNAMICS - VES ACCEPTABLE EXHAUST GASES | ISS | A or A&T | |

MSFC-RQMT-2888 Paragraph Number(s), Title(s), and Method(s):
3.5.1.5.a-d Acceptable Exhaust Gases (A or T)
.3.5.1.5.1 Acceptable Exhaust Gases Initial List (A)

Requirement Summary:

The investigation vented constituents must be compatible with wetted materials of the module VES, and there must be no explosive gas potential.

Detailed Descriptions of Requirements:

A. Verification that exhaust gases vented into the Vacuum Exhaust System (VES) of the USL are compatible with the wetted surface materials of the respective laboratory in which the integrated rack will operate shall be by analysis or test. Gases documented in Appendix D of MSFC_RQMT-2888 have been analyzed for compatibility with the ISS VES wetted materials. The investigation provider shall submit a complete list of all proposed vent gas constituents, initial volume, concentration, temperature, and pressure to the IIT team. The list submitted shall also identify which exhaust gases will be vented together and shall include the products of any reactions determined in paragraph 3.5.1.5.b of MAFC-RQMT-2888. The IIT team will forward this list to the ISS module integrator and they will analyze the list of gases not specified in Appendix D of MSFC_RQMT-2888 and the VES wetted surface materials to determine whether or not the proposed exhaust gases are compatible with the VES wetted materials. The ISS program will evaluate and conduct a test, if necessary, for gases that do not have compatibility documentation to determine whether or not the proposed exhaust gases are compatible with the VES wetted surface. The investigator shall review the investigations proposed vent gases and determine whether or not the gases are listed as acceptable in Appendix of MSFC_RQMT-2888 or on the report provided to the IIT team. Verification shall be considered successful when the proposed exhaust gases are shown to be compatible with the VES wetted surface materials of the respective laboratory in which the investigation will operate.

B. Verification that investigation gases vented to the ISS VES are non-reactive with other gas mixture constituents shall be by analysis. The ISS program will evaluate and conduct an analysis to determine what gases will be vented to the ISS VES and, assuming the worst case reactions possible, shall determine all reactions that are possible among the vent gases constituents. An analysis shall calculate the worst case temperature change associated with the possible vent gas reactions in accordance with the following equation. Verification shall be considered successful when the analysis shows the gases vented to the VES are non-reactive according to the equation.

$$20 \geq \frac{\Sigma \text{ ALL REACTIONS} \left[ \left[ \frac{(\Sigma X_P H_P - \Sigma X_{r1} Hr)}{N_{lim}} \right] m_{lim} \right]}{\Sigma X_P m_P c_{PP} + \Sigma X_{r2} m_r c_{pr} + \Sigma Xdmdcpd}$$

Hp = Enthalpy of formation of the products (J/mol)

Hr = Enthalpy of formation of the reactants (J/mol)

Xr1 = Number of moles of the reactants

Xr2 = Number of moles of the unreacted reactants

| Number | Title | Purpose | Method | Hazard Report(s) |
|---|---|---|---|---|
| IIT-FD-018 | FLUID DYNAMICS - VES ACCEPTABLE EXHAUST GASES | ISS | A or A&T | |

Xp = Number of moles of the products

Xd = Number of moles of the diluent

nlim = Molecular Weight of the limiting reactant in the reaction (g/mol)

mlim = Mass of the limiting reactant in the reaction (g)

mp = Mass of each product gas in the vent mixture (g)

mr = Mass of each unreacted reactant gas in the vent mixture (g)

md = Mass of each diluent gas in the vent mixture (g)

cpp = Constant Pressure Heat Capacity of each product gas at the vented condition (J/(g*K))

cpr = Constant Pressure Heat Capacity of each unreacted gas at the vented condition (J/(g*K))

cpd = Constant Pressure Heat Capacity of each diluent gas at the vented condition (J/(g*K))

Note: The exact equation used may vary slightly depending on the units of the data available for the given gases. These variations shall be limited to units conversions only. The final units ofthe equation should be a measure of temperature, measured in Celsius or Kelvin.

For each possible reaction in the vent gas mixture, all gases associated with the reaction shall be included in the calculation in the numerator. All possible reactions in the vent gases mixture shall be calculated and summed together in the numerator. All gases in the vented mixture should be included in the denominator of the analysis. Unreacted reactants may be summed in the denominator as a diluent, when rich or lean mixtures are expected for a given reaction. When lean or rich mixtures are expected for one reaction, an analysis shall show that the excess reactant gases will not react with another gas in the vent mixture (the original reaction considered should be the worst case, i.e. most energy released, reaction).

If trace elements (up to the SMAC value) are present and do not participate in a reaction, they may be excluded from this analysis.

Verification shall be considered successful when the analysis shows the gases vented to the ISS VES/WGS are non–reactive according to the equation specified above (the equation meets the inequality).

Note: Venting of cabin air or the ISS pressurized gases, Nitrogen, Carbon Dioxide, Argon or Helium, or mixtures of these gases are considered acceptable and do not require verification if they are not mixed with other gases.

C. Verification that the investigation venting to the ISS VES provide a means of removing gases that should adhere to the VES tubing walls at a wall temperature of 4°C (40°F) and a pressure of $10^{-3}$ torr shall be by analysis. An analysis shall determine whether or not the gas mixture contains gases with a molecular weight greater than 75 amu or gases which have a boiling point greater than 100°C (212°F) at atmospheric pressure.

   Each proposed vent gas with a molecular weight greater than 75 amu or boiling point greater than 100°C (212°F) at atmospheric pressure shall be analyzed to determine whether or not the vapor pressure is below a pressure of $10^{-3}$ torr at 4°C (40°F). This analysis shall be conducted gas-by-gas. If any proposed vent gases are determined to have a vapor pressure below $10^{-3}$ torr at 4°C (40°F), an analysis shall be conducted to determine whether or not the integrated rack

| Number | Title | Purpose | Method | Hazard Report(s) |
|---|---|---|---|---|
| IIT-FD-018 | FLUID DYNAMICS - VES ACCEPTABLE EXHAUST GASES | ISS | A or A&T | |

provides a means to remove these gases from the vent gas mixture prior to venting to the ISS VES.

Verification shall be considered successful when the analysis shows the gases that will be exposed to the ISS VES will not adhere to the ISS VES tubing wall at a wall temperature of 4°C (40°F) and a pressure of $10^{-3}$ torr. Gases that will be exposed to the ISS VES will not adhere to the ISS VES tubing walls when each vent gas is shown to have a vapor pressure above $10^{-3}$ torr at 4°C (40°F) or a boiling temperature below 4°C (40°F) at a pressure of $10^{-3}$ torr and/or, any gases found with a vapor pressure below $10^{-3}$ torr at 4°C (40°F) or a boiling temperature above 4°C (40°F) at a pressure of $10^{-3}$ torr are removed from the gas mixture.

D. Verification that investigations venting to the ISS VES remove particulates from the vent gases that are larger than 100 micrometers shall be by analysis. An analysis shall determine whether or not the vent gases will contain particulate contamination larger than 100 microns. Should the analysis show that particulate contamination greater than 100 microns will be introduced into, or generate in, the vent gases, an analysis shall determine whether or not a means of removing the particles above 100 microns before venting to the ISS VES is included in the investigation design. Verification shall be considered successful when the analysis shows the vent gases will not contain particulate contamination greater than 100 microns.

| Required Verification Data: | Data Submittal Dates: |
|---|---|
| 1. Preliminary Data Cert. providing constituents of vented gas, volume, concentration, temperature, and pressure. | 1. L-20 |
| 2. Data Cert. providing updated constituents of vented gases, volume, concentration, temperature, and pressure (if required). | 2. L-12 |
| 3. Data Cert. For Item C, showing that investigation venting in the ISS VES provides a means to remove gases that should adhere to the VES tubing wall. | 3. L-12 |
| 4. Data Cert. For Item D, showing that all particulates larger than 100 microns are removed prior to venting to the VES. | 4. L-12 |

| Description of Reverification Requirements: | Reverification Method: | Hazard Report(s): |
|---|---|---|
| See section 5.3 for details. | | |

| Required Reverification Data: | Data Submittal Dates: |
|---|---|
| | |

Applicable Document(s):

SSP 57000, par. 3.6.1.5

NSTS.1700.7

Verification Definition Sheets

| Number | Title | Purpose | Method | Hazard Report(s) |
|---|---|---|---|---|
| IIT-FD-019 | FLUID DYNAMICS - EXTERNAL CONTAMINATION CONTROL | ISS | A | |

MSFC-RQMT-2888 Paragraph Number(s), Title(s), and Method(s):
3.5.1.5.2 External Contamination Control (A)
3.9.1.2.e Additional Investigation Materials Req.

Requirement Summary:

Vented constituents must not exceed the specified external contamination limits.

Detailed Descriptions of Requirements:

Verification shall be by analysis. The investigation shall submit the list of vented gas constituents, volume, temperature, and pressure to the IIT team, per requirement FD-18.

The verification shall be considered successful when the Environments Team verifies that the vented gases do not exceed the external contamination limits as specified in SSP 30426, paragraph 3.4. & MSFC-RQMT-2888 Paragraph 3.5.1.5.2

| Required Verification Data: | Data Submittal Dates: |
|---|---|
| 1. Preliminary Data Cert providing the required list of vented gas characteristics (vented gas constituents, volume, temperature, and pressure). | 1. L-20 |
| 2. Updated Data Cert (if required). | 2. L-12 |

| Description of Reverification Requirements: | Reverification Method: | Hazard Report(s): |
|---|---|---|
| See section 5.3 for details. | | |

| Required Reverification Data: | Data Submittal Dates: |
|---|---|
| | |

Applicable Document(s):

SSP 30426 par. 3.4
SSP 57000 par. 3.6.1.5.2

| Number | Title | Purpose | Method | Hazard Report(s) |
|---|---|---|---|---|
| IIT-FD-020 | FLUID DYNAMICS - INCOMPATIBLE GASES | ISS | A&I | |

MSFC-RQMT-2888 Paragraph Number(s), Title(s), and Method(s):
3.5.1.5.3 Incompatible Gases (A&I)

Requirement Summary:

The methods and hardware utilized for incompatible gas containment, storage, and transport must satisfy certain criteria.

Detailed Descriptions of Requirements:

Verification shall be by inspection and analysis. The inspection shall consist of verification that gas containment volume is provided for incompatible gases to MSFC-RQMT-2888, Paragraph 3.5.1.5.3. The analysis shall verify that the containment volume is sufficient to contain the gas and complies with the pressure vessel requirements as specified in SSP 52005, paragraph 5.1.3 and NSTS 1700.7, ISS Addendum, paragraph 209.1b. The method of transportation of containment volume from on–orbit to ground shall be identified.

| Required Verification Data: | Data Submittal Dates: |
|---|---|
| 1. Certificate of Compliance (COC). | 1. L-8 |

| Description of Reverification Requirements: | Reverification Method: | Hazard Report(s): |
|---|---|---|
| See section 5.3 for details. | | |

| Required Reverification Data: | Data Submittal Dates: |
|---|---|
| | |

Applicable Document(s):

SSP 52005, par. 5.1.3
SSP 57000, par. 3.6.1.5.3
NSTS.1700.7

Verification Definition Sheets

| Number | Title | Purpose | Method | Hazard Report(s) |
|---|---|---|---|---|
| IIT-FD-021 | FLUID DYNAMICS - VRS PHYSICAL INTERFACE | IIT | T & D | |

MSFC-RQMT-2888 Paragraph Number(s), Title(s), and Method(s):
3.5.2.1.a-e VRS Physical Interface (T & D)

Requirement Summary:

The investigation Vacuum Resource System (VRS) mechanical connector must mate correctly and meet the following requirements.

Detailed Descriptions of Requirements:

A. Verification that the investigation VRS connector, as specified in MSFC-RQMT-2888, Paragraph 3.5.2.1.a, physically mates with the corresponding MSG connector shall be by demonstration. The demonstration shall use the MSG ground facility to verify that the VRS connectors physically mate. The verification shall be considered successful when the demonstration shows the investigation connector physically mates with its corresponding MSG facility connector.

B. Verify by test that the leak rate at the connector interface is less than 2 X $10^{-3}$ scc/sec as specified in MSFC-RQMT-2888, Paragraph 3.5.2.1.b.

C. Verify by demonstration that the investigation provides two additional controls to stop the flow of gases when connected to the VRS system.

D. Verify by test that the investigation will not block the flow of gases when connected to the VRS system.

E. Gases vented to the VRS system shall be within the same restrictions as for VES vented gases as defined in VRDS sheets FD-018, FD-019 and FD-020.

NOTE: The demonstration can be closed during physical or functional testing using either the EU or GU.

| Required Verification Data: | Data Submittal Dates: |
|---|---|
| 1. Certificate of Compliance (COC). | 1. L-8 |

| Description of Reverification Requirements: | Reverification Method: | Hazard Report(s): |
|---|---|---|
| See section 5.3 for details. | | |

| Required Reverification Data: | Data Submittal Dates: |
|---|---|
| | |

Applicable Document(s):

| Number | Title | Purpose | Method | Hazard Report(s) |
|---|---|---|---|---|
| IIT-FD-022 | FLUID DYNAMICS - VRS INPUT PRESSURE LIMIT | ISS | A&T | |

MSFC-RQMT-2888 Paragraph Number(s), Title(s), and Method(s):
3.5.2.2.a-c Input Pressure Limit (A&T)

Requirement Summary:

The interface pressure from the investigation to VRS must not exceed specific limits.

Detailed Descriptions of Requirements:

A. Verify by test that the interface pressure from the integrated rack to VRS will not exceed $10^{-3}$ Torr at the interface plane as specified in MSFC-RQMT-2888 Paragraph 3.5.2.2.a.
Note: PRCU, or equivalent, will be able to monitor VRS throughput.

B. Verify by analysis that the investigation volumes connected to the VRS shall be designed to a maximum design pressure of at least 276 kPa (40 psia) with safety factors in accordance with MSFC-RQMT-2888, Paragraph 3.5.2.2.b.

C. Verify by analysis that the investigation system (including the chamber) provides a two fault tolerant design to prevent venting gases at pressures greater than 276 kPa (40 psia) at the interface. Verification shall be considered successful when the analysis shows the investigation system provides a two fault tolerant design to prevent venting gases to the VRS system at pressures at the interface as specified in MSFC-RQMT-2888, Paragraph 3.5.2.2.c.

NOTE: The test can be closed during physical or functional testing using either the EU or GU.

| Required Verification Data: | Data Submittal Dates: |
|---|---|
| 1. Certificate of Compliance (COC). | 1. L-8 |

| Description of Reverification Requirements: | Reverification Method: | Hazard Report(s): |
|---|---|---|
| See section 5.3 for details. | | |

| Required Reverification Data: | Data Submittal Dates: |
|---|---|
| | |

Applicable Document(s):

SSP 52005, par. 5.1.3
SSP 57000, par. 3.6.2.2
NSTS.1700.7

Verification Definition Sheets

| Number | Title | Purpose | Method | Hazard Report(s) |
|---|---|---|---|---|
| IIT-FD-023 | FLUID DYNAMICS - VRS THROUGH-PUT LIMIT | ISS | T | |

MSFC-RQMT-2888 Paragraph Number(s), Title(s), and Method(s):
3.5.2.3 VRS Through-Put Limit (T)

Requirement Summary:

Throughput pressure at the VRS mechanical connection must be within specified limits.

Detailed Descriptions of Requirements:

Testing shall be used to verify that the throughput to the VRS interface shall be limited to 1.2 X $10^{-3}$ scc/sec as specified in MSFC-RQMT-2888, Paragraph 3.5.2.3. The test shall utilize a PRCU, or equivalent, to measure the vented gas throughput at the interface plane.

NOTE: The test can be closed during physical or functional testing using either the EU or GU.

| Required Verification Data: | Data Submittal Dates: |
|---|---|
| 1. Certificate of Compliance (COC). | 1. L-8 |

| Description of Reverification Requirements: | Reverification Method: | Hazard Report(s): |
|---|---|---|
| See section 5.3 for details. | | |

| Required Reverification Data: | Data Submittal Dates: |
|---|---|
| | |

Applicable Document(s):

SSP 57000, par. 3.6.2.3
SSP 57001, par. 3.6.2B

| Number | Title | Purpose | Method | Hazard Report(s) |
|---|---|---|---|---|
| IIT-FD-024 | FLUID DYNAMICS - PRESSURIZED GASES INTERFACE CONTROL (NITROGEN) | ISS | T | |

MSFC-RQMT-2888 Paragraph Number(s), Title(s), and Method(s):
3.6.1.2 Nitrogen Interface Control (T)

Requirement Summary:

The investigation must be capable of controlling the flow of pressurized nitrogen gas supply system when connected to it.

Detailed Descriptions of Requirements:
Verification of gaseous flow control shall be by test. The verification shall be considered successful when the test results confirm that the investigation can turn the flow of gas on and off and can maintain the gas flows below the pressurants maximum flow rate. The maximum allowable flow rate is applicable over the pressurants operating range in accordance with MSFC-RQMT-2888, Paragraph 3.7.1.1. (The PRCU, or equivalent, can be used for nitrogen testing.)

NOTE: The test can be closed during physical or functional testing using either the EU or GU.

| Required Verification Data: | Data Submittal Dates: |
|---|---|
| 1. Certificate of Compliance (COC). | 1. L-8 |

| Description of Reverification Requirements: | Reverification Method: | Hazard Report(s): |
|---|---|---|
| See section 5.3 for details. | | |

| Required Reverification Data: | Data Submittal Dates: |
|---|---|
| | |

Applicable Document(s):

SSP 57000, par. 3.7.1.1, 3.7.2.1, 3.7.3.1, and 3.7.4.1

Verification Definition Sheets

| Number | Title | Purpose | Method | Hazard Report(s) |
|---|---|---|---|---|
| IIT-FD-025 | FLUID DYNAMICS -MDP (NITROGEN) PRESSURIZED GASES INTERFACE | ISS | A&T | |

MSFC-RQMT-2888 Paragraph Number(s), Title(s), and Method(s):
3.6.1.3 Nitrogen Interface Pressure (A&T)

Requirement Summary:

The Maximum Design Pressure (MDP) of investigation hardware connected to the pressurized nitrogen gas supply system must comply with pressure requirements.

Detailed Descriptions of Requirements:

The MDP of investigation volumes connected to the nitrogen gaseous supply system shall be verified by the test and analysis guidelines as specified in SSP 52005, paragraph 5.1.3 and NSTS 1700.7 ISS addendum for pressure vessels. The MDP of any hardware interfacing with referenced pressurant systems shall be 1,379 kPa (200 psia), in accordance with MSFC-RQMT-2888 Paragraph 3.6.1.3.

| Required Verification Data: | Data Submittal Dates: |
|---|---|
| 1. Data identified for Phase Safety Review II in accordance with SSP52005, Table 9.2.2-1. | 1. L-15 |
| 2. Data identified for Phase Safety Review III in accordance with SSP52005, Table 9.2.2-1. | 2. L-12 |

| Description of Reverification Requirements: | Reverification Method: | Hazard Report(s): |
|---|---|---|
| See section 5.3 for details. | | |

| Required Reverification Data: | Data Submittal Dates: |
|---|---|
| | |

Applicable Document(s):

SSP 52005, par. 5.1.3
SSP 57000, par. 3.7.1.2, 3.7.2.2, 3.7.3.2, and 3.7.4.2
NSTS.1700.7

| Number | Title | Purpose | Method | Hazard Report(s) |
|---|---|---|---|---|
| IIT-FD-026 | FLUID DYNAMICS - PRESSURIZED GASES INTERFACE TEMPERATURE (NITROGEN) | ISS | A or T or A&T | |

MSFC-RQMT-2888 Paragraph Number(s), Title(s), and Method(s):
3.6.1.4 Nitrogen Interface Temp (A or T or A&T)

Requirement Summary:

The investigation hardware connected to pressurized nitrogen gas supply system must comply with supply-temperature range requirements.

Detailed Descriptions of Requirements:

Verification that the investigation gas pressurant system is compatible with the nitrogen gaseous supply system interface temperature range shall be by test or analysis or both. The verification shall be considered successful when analysis of the gas system components, including component qualification data packs or test results, show that the investigation system is compatible with the nitrogen gaseous supply system temperature range as specified in MSFC-RQMT-2888, Paragraph 3.6.1.4.

| Required Verification Data: | Data Submittal Dates: |
|---|---|
| 1. Certificate of Compliance (COC). | 1. L-8 |

| Description of Reverification Requirements: | Reverification Method: | Hazard Report(s): |
|---|---|---|
| See section 5.3 for details. | | |

| Required Reverification Data: | Data Submittal Dates: |
|---|---|
| | |

Applicable Document(s):

SSP 57000, par. 3.7.1.3, 3.7.2.3, 3.7.3.3, and 3.7.4.3

Verification Definition Sheets

| Number | Title | Purpose | Method | Hazard Report(s) |
|---|---|---|---|---|
| IIT-FD-027 | FLUID DYNAMICS - NITROGEN PHYSICAL INTERFACE & LEAKAGE | ISS&IIT | I &T | |

MSFC-RQMT-2888 Paragraph 4 Number(s), Title(s), and Method(s):
3.6.1.1.a Physical Interface (I)
3.6.1.1.b Nitrogen Leakage (T)

Requirement Summary:

The investigation provided QD shall be of the correct type, and the pressurized nitrogen gas supply systems, fluid leakage at the MDP of the investigation hardware must be less than allowable limits.

Detailed Descriptions of Requirements:
A. Verification of investigation nitrogen interface shall be by inspection. The verification shall be considered successful when an inspection of the investigation drawings shows that the correct QD connector is being used in accordance with MSFC-RQMT-2888, Paragraph 3.6.1.1.a.

B. Verification of investigation gaseous leakage shall be by test. The verification shall be considered successful when the test results show that the sum of all potential leakage sources from the QD connection to the point of pressurized nitrogen gas flow control in the investigation does not exceed the allowable leakage rate at MDP in accordance with MSFC-RQMT-2888, Paragraph 3.6.1.1.b.

| Required Verification Data: | Data Submittal Dates: |
|---|---|
| 1. Data Cert providing leakage test results in scc per sec.. If a representative gas is used to determine leakage (i.e. helium), conversion factors used for the subject gas are to be provided. | 1. L-8 |

| Description of Reverification Requirements: | Reverification Method: | Hazard Report(s): |
|---|---|---|
| See section 5.3 for details. | | |

| Required Reverification Data: | Data Submittal Dates: |
|---|---|
| | |

Applicable Document(s):

SSP 57000, par. 3.7.1.4, 3.7.2.4, 3.7.3.4, and 3.7.4.4

| Number | Title | Purpose | Method | Hazard Report(s) |
|---|---|---|---|---|
| IIT-FD-028 | FLUID DYNAMICS - PRESSURIZED GAS BOTTLES | ISS | A | |

MSFC-RQMT-2888 Paragraph Number(s), Title(s), and Method(s):
3.6.2 Pressurized Gas Bottles (A)

Requirement Summary:

The maximum leak rate of pressurized gas bottles transported in the MPLM must not exceed the specified limit.

Detailed Descriptions of Requirements:

Verification of the expanded volume and flow rate for pressurized gas systems shall be by analysis. The verification shall be considered successful when the analysis of the drawing's shows that the expanded volume of the gas in the pressurized system is below the limiting volume specified in MSFC-RQMT-2888, Paragraph 3.6.1. If the volume exceeds the limiting volume, then an analysis must be performed verifying that the flow rate after a single failure does not exceed the maximum allowable amount after release of the limiting expanded volume as defined in MSFC-RQMT-2888, Paragraph 3.6.1.

| Required Verification Data: | Data Submittal Dates: |
|---|---|
| 1. Data Cert providing maximum credible leak rate (in slpm) for each bottle. | 1. L-8 |

| Description of Reverification Requirements: | Reverification Method: | Hazard Report(s): |
|---|---|---|
| See section 5.3 for details. | | |

| Required Reverification Data: | Data Submittal Dates: |
|---|---|
| | |

Applicable Document(s):

SSP 57000, par. 3.7.5

NSTS.1700.7

Verification Definition Sheets

| Number | Title | Purpose | Method | Hazard Report(s) |
|---|---|---|---|---|
| IIT-EN-001 | ENVIRONMENTAL - ATMOSPHERE HUMIDITY | ISS | A | |

MSFC-RQMT-2888 Paragraph Number(s), Title(s), and Method(s):
3.7.1.3 Humidity (A)

Requirement Summary:

Investigation surfaces must preclude formation of condensation when exposed to a specified humidity and dewpoint range.

Detailed Descriptions of Requirements:

Analysis shall be used to verify that the investigation is designed to not cause condensation when exposed to the specified dewpoint and relative humidity except when condensation is an intended operation of the investigation. The verification shall be considered successful when analysis shows that no internal or external surfaces will allow condensation over humidity and dewpoint ranges as specified in MSFC-RQMT-2888, Paragraph 3.7.1.3. Surfaces shall be considered to be in contact with the air unless a volume is hermetically sealed or environmentally conditioned to control humidity.

| Required Verification Data: | Data Submittal Dates: |
|---|---|
| 1. Analysis report including:<br>- Description of condensation collection system<br>- Illustration of all components or surfaces where condensation is most likely to occur when the cabin humidity exceeds the nominal case.<br>- Upper humidity limit in terms of dewpoint. | 1. L-8 |

| Description of Reverification Requirements: | Reverification Method: | Hazard Report(s): |
|---|---|---|
| See section 5.3 for details. | | |

| Required Reverification Data: | Data Submittal Dates: |
|---|---|
| | |

Applicable Document(s):

SSP 57000, par. 3.9.1.3

| Number | Title | Purpose | Method | Hazard Report(s) |
|---|---|---|---|---|
| IIT-EN-002 | ENVIRONMENTAL -ACTIVE AIR EXCHANGE | ISS&IIT | A&I | |

MSFC-RQMT-2888 Paragraph Number(s), Title(s), and Method(s):
3.7.4.1 Active Air Exchange (I)
3.7.4.4 Cabin Air Cooling (A)

Requirement Summary:

Investigation equipment air exchange with the cabin is limited by specimen metabolic, mass conservation, and heat rejection constraints.

Detailed Descriptions of Requirements:

A. Inspection shall be used to verify that active air exchange with the cabin atmosphere by an integrated rack is limited to air exchange for specimen metabolic purposes and for mass conservation purposes. The verification shall be considered successful when inspection of the flight drawings shows that the active air exchange with the cabin atmosphere by an investigation is limited to air exchange for specimen metabolic purposes and for mass conservation purposes.

B. Verification that investigation equipment heat loads imposed on cabin air is within the specified limits for each module shall be by analysis. The verification shall be considered successful when the analysis shows that investigation equipment cabin air heat loads comply with the values as specified in the Unique Investigation Hardware ICD.

| Required Verification Data: | Data Submittal Dates: |
|---|---|
| 1. Certificate of Compliance (COC). | 1. L-8 |

| Description of Reverification Requirements: | Reverification Method: | Hazard Report(s): |
|---|---|---|
| See section 5.3 for details. | | |

| Required Reverification Data: | Data Submittal Dates: |
|---|---|
| | |

Applicable Document(s):

SSP 57000, par. 3.9.2.1

Verification Definition Sheets

| Number | Title | Purpose | Method | Hazard Report(s) |
|---|---|---|---|---|
| IIT-EN-003 | ENVIRONMENTAL - OXYGEN CONSUMPTION | ISS | A | |

MSFC-RQMT-2888 Paragraph Number(s), Title(s), and Method(s):
3.7.4.2 Oxygen Consumption (A)

Requirement Summary:

Investigation consumption of atmospheric oxygen must not exceed the daily allowable.

Detailed Descriptions of Requirements:

Verification that the investigation consumption of atmospheric oxygen does not exceed the specified amount shall be by analysis. The verification shall be considered successful when analysis shows that the investigation consumption of atmospheric oxygen shall not exceed 1.08 kg per day (2.38 lbm per day) as specified in MSFC-RQMT-2888, Paragraph 3.7.4.2.

| Required Verification Data: | Data Submittal Dates: |
|---|---|
| 1. Data Cert providing the investigation oxygen consumption analysis results. | 1. L-8 |

| Description of Reverification Requirements: | Reverification Method: | Hazard Report(s): |
|---|---|---|
| See section 5.3 for details. | | |

| Required Reverification Data: | Data Submittal Dates: |
|---|---|
| | |

Applicable Document(s):

SSP 57000, par. 3.9.2.2

| Number | Title | Purpose | Method | Hazard Report(s) |
|---|---|---|---|---|
| IIT-EN-005 | ENVIRONMENTAL - MICROGRAVITY ENVIRONMENT | ISS&IIT | T | |

MSFC-RQMT-2888 Paragraph Number(s), Title(s), and Method(s):
3.1.2.1 Quasi-Steady Requirements (TBD)
3.1.2.2 Vibratory Requirements (TBD)
3.1.2.3 Transient Requirements (TBD)

Requirement Summary:

Payloads shall not exceed maximum allowable quasi-steady, vibratory or transient microgravity disturbance limits.

Detailed Descriptions of Requirements:

A. Investigation hardware shall meet the quasi-steady, vibroacoustic, and transient disturbance requirements as specified in MSFC-RQMT-2888, paragraph 3.1.2.

   i. Quasi-steady - TBD

   ii. Vibroacoustic - TBD

   iii. Transient - TBD

| Required Verification Data: | Data Submittal Dates: |
|---|---|
| 1. Microgravity Control Plan (Guidelines given in Appendix TBD) | 1. L-22 |
| 2. Review of the Microgravity Control Plan (ISS Activity). | 2. L-21 |
| 3. Preliminary Test Report | 3. L-20 (input to Payload ICD) |
| 4. Final Test and Inspection Reports | 4. L-12 |

| Description of Reverification Requirements: | Reverification Method: | Hazard Report(s): |
|---|---|---|
| See section 5.3 for details. | | |

| Required Reverification Data: | Data Submittal Dates: |
|---|---|
| | |

Applicable Document(s):

SSP 57000, par. 3.1.2.1, 3.1.2.2, 3.1.2.3, and 3.1.2.5.3
SSQ 21635

Verification Definition Sheets

| Number | Title | Purpose | Method | Hazard Report(s) |
|---|---|---|---|---|
| IIT-EN-006 | ENVIRONMENTAL - ACOUSTIC LEVELS | ISS | T | |

MSFC-RQMT-2888 Paragraph Number(s), Title(s), and Method(s):
3.10.2.2.3.a Continuous Noise Limits (A&T)
3.10.2.2.3.b Intermittent Noise Limit (A&T)

Requirement Summary:
Investigation equipment, having moving parts (etc fans), acoustic levels must not exceed specified values.

Detailed Descriptions of Requirements:

A. Continuous Acoustic Noise - The investigation equipment having moving parts (etc fans) shall not exceed the continuous acoustic noise requirements as specified in MSFC-RQMT-2888, Paragraph 3.10.2.2.3.a Continuous noise sources which exhibit intermittent acoustical characteristics must meet both the continuous noise specification and the intermittent noise requirements of paragraph B below.

   i. Verification of continuous noise sources for investigation equipment shall be performed by test or an integrated test with the EU. Sound Pressure Level (SPL) test measurements shall be made on the flight hardware with moving parts or with the equipment operating inside the WV, as it would be during on-orbit operations. Measurements shall be made on all sides of the investigation hardware or with the hardware inside the EU. The SPL test shall use a Type 1 Sound Level Meter to measure the SPL at the loudest location 0.6 meters from the surfaces. SPL shall be measured in each of eight octave bands: 63 Hz, 125 Hz, 250 Hz, 500 Hz, 1000 Hz, 2000 Hz, 4000 Hz, and 8000 Hz. Verification shall be considered successful when the test shows that the loudest noise on equipment surfaces exposed directly to the crew habitable volume does not exceed the levels as specified in MSFC-RQMT-2888, Paragraph 3.10.2.2.3.a. Investigation equipment unable to meet the specified levels will be required to take sound power measurements in addition to SPL measurements.

B. Intermittent Acoustic Noise - The investigation equipment having moving parts (etc fans) shall not exceed the intermittent acoustic noise requirements as specified in MSFC-RQMT-2888, Paragraph 3.10.2.2.3.b. Intermittent noise characteristics shall be quantified in terms of (1) when the intermittent sound occurs, (2) duration and A-weighted SPL, and (3) a projected mission timeline(s). Intermittent noise sources which also exhibit continuous acoustical noise characteristics must meet both the intermittent noise requirements and the continuous noise specification of paragraph A above.

   i. Verification of intermittent noise sources for investigation equipment having moving parts (etc. fans) shall be performed by test or an integrated test with the EU. Overall A-weighted SPL (dBA) test measurements shall be made on the flight hardware with moving parts or with the equipment operating inside the work volume of the EU. Measurements shall be made using the guidelines provided by the IIT. The SPL test shall use a Type 1 Sound Level Meter to measure the overall A-weighted SPL at the loudest location 0.6 meters from the equipment surfaces. Verification shall be considered successful when the test shows the investigation hardware or integrated rack overall A-weighted SPL (dBA) does not exceed the levels as specified in MSFC-RQMT-2888 Paragraph, 3.10.2.2.4.b.

Required Verification Data:

Final Submittal of A&B data listed below

A. Continuous Noise Source - SPL (dB) for the eight octave bands (for each serialized unit) (Note: If the rack does not meet specified sound levels additional sound power level data must also be provided for the eight octave bands)

C. Intermittent Noise Source - Overall A-weighted SPL (dBA)

Continued on next page

Data Submittal Dates:
1. L-10 (with further updates as required.)

| Number | Title | Purpose | Method | Hazard Report(s) |
|---|---|---|---|---|
| IIT-EN-006 | ENVIRONMENTAL - ACOUSTIC LEVELS | ISS | T | |

Description of Reverification Requirements:

Continued from previous page

Reverification Method:

Hazard Report(s):

Required Reverification Data:

See section 5.3 for details.

Applicable Document(s):

SSP 57000, par. 3.12.3.3.1, 3.12.3.3.2, and Tables 3.12.3.3.1-1 and 3.12.3.3.2-1

Verification Definition Sheets

| Number | Title | Purpose | Method | Hazard Report(s) |
|---|---|---|---|---|
| IIT-EN-007 | ENVIRONMENTAL – WORK VOLUME ENVIRONMENTAL | IIT | A or T | |

MSFC-RQMT-2888 Paragraph Number(s), Title(s), and Method(s):
3.7.3.a,b,d,e,f WV Environment (A or T)

Requirement Summary:

Investigation hardware shall meet the specified WV environment compatibility requirements.

Detailed Descriptions of Requirements:

A. Verification of the investigation hardware exposed to the WV negative pressure of $\geq$1.3 mbar relative to cabin pressure shall be by analysis. The verification shall be considered successful when the analysis shows that the hardware is structurally sound when exposed to the WV negative pressure as specified in MSFC-RQMT-2888, Paragraph 3.7.3.a.

B. Investigation shall not cause an overpressurization of the WV, that being 20 mbar negative $\Delta p$ and 15 mbar positive $\Delta p$. The verification shall be considered successful when the analysis shows that the hardware can not cause an overpressurization of the WV as specified in MSFC-RQMT-2888, Paragraph 3.7.3.b.

C. Verification of investigation hardware integrated into the MSG WV shall be compatible with the dimensions specified in MSFC-RQMT-2888, Paragraph 3.7.3.c. The verification shall be considered successful when the analysis of the hardware drawings or fit check (test with facility) shows that the hardware is compatible with the WV dimensions and exclusion zone requirements are satisfied.

Note: Test can be done using either the EU or GU.

D. Verification of investigation hardware to be transferred to the WV through the side port shall be compatible with the dimensions specified in MSFC-RQMT-2888, Paragraph 3.7.3.d. The verification shall be considered successful when the analysis of the hardware drawings or fit check (test with facility) shows that the hardware is compatible with the side port dimensions.

Note: Test can be done using either the EU or GU.

E. Verification of investigation hardware to be transferred to the WV through the airlock shall be compatible with the dimensions specified in MSFC-RQMT-2888, Paragraph 3.7.3.e. The verification shall be considered successful when the analysis of the hardware drawings or fit check (test with facility) shows that the hardware is compatible with the airlock dimensions.

NOTE: The test can be closed during physical or functional testing using either the EU or GU.

| Required Verification Data: | Data Submittal Dates: |
|---|---|
| 1. Certificate of Compliance (COC) for item A, B, C and D explicitly. | 1. L-8 |

| Description of Reverification Requirements: | Reverification Method: | Hazard Report(s): |
|---|---|---|
| See section 5.3 for details. | | |

| Required Reverification Data: | Data Submittal Dates: |
|---|---|
| | |

Applicable Document(s):

| Number | Title | Purpose | Method | Hazard Report(s) |
|---|---|---|---|---|
| IIT-MP-002 | MATERIALS - CLEANLINESS | ISS | I | |

MSFC-RQMT-2888 Paragraph Number(s), Title(s), and Method(s):
3.9.2 Cleanliness (I)

Requirement Summary:

Investigation provided equipment surfaces must meet certain criteria for surface cleanliness and the equipment exposed surfaces can be cleaned.

Detailed Descriptions of Requirements:

Verification that investigation equipment conform to Visibly Clean-Sensitive (VC-S) cleanliness requirements as specified in SN-C-0005 shall be by inspection. An inspection of the cleanliness documentation required by precision cleaning shall be performed to show that each assembly part, component, subsystem, and system of the end product meets the VC-S requirement. Verification shall be considered successful when the inspection shows that each part, component, subsystem, and system of the end product meets the VC-S requirements.

| Required Verification Data: | Data Submittal Dates: |
|---|---|
| 1. Certificate of Compliance (COC). | 1. L-8 |

| Description of Reverification Requirements: | Reverification Method: | Hazard Report(s): |
|---|---|---|
| See section 5.3 for details. | | |

| Required Reverification Data: | Data Submittal Dates: |
|---|---|
| | |

Applicable Document(s):

SN-C-0005
SSP 57000, par. 3.11.3

Verification Definition Sheets

| Number | Title | Purpose | Method | Hazard Report(s) |
|---|---|---|---|---|
| IIT-MP-003 | MATERIALS - FUNGUS RESISTANT MATERIAL | ISS | I | |

MSFC-RQMT-2888 Paragraph Number(s), Title(s), and Method(s):
3.9.1.2.f Fungus Resistant Material (I)

Requirement Summary:

Investigation equipment that is intended to remain on orbit for more than one year must use fungus-resistant materials according to specific criteria.

Detailed Descriptions of Requirements:

Inspection shall be used to verify that investigation equipment that is intended to remain on-orbit for more than one year use fungus resistant materials according to the requirements as specified in SSP 30233, paragraph 4.2.10. Inspection of design drawings and materials lists shall determine whether fungus resistant materials have been used as required. Verification shall be considered successful when the inspection shows fungus resistant materials are used as required.

| Required Verification Data: | Data Submittal Dates: |
|---|---|
| 1. Certificate of Compliance (COC). | 1. L-8 |

| Description of Reverification Requirements: | Reverification Method: | Hazard Report(s): |
|---|---|---|
| See section 5.3 for details. | | |

| Required Reverification Data: | Data Submittal Dates: |
|---|---|
| | |

Applicable Document(s):

SSP 30233, par. 4.2.10
SSP 57000, par. 3.11.4

| Number | Title | Purpose | Method | Hazard Report(s) |
|---|---|---|---|---|
| IIT-MP-004 | MATERIALS – ADDITIONAL INVESTIGATION MATERIAL REQ. | IIT | A&I&T | |

MSFC-RQMT-2888 Paragraph Number(s), Title(s), and Method(s):
3.9.1.2.a,b,c,d,g,h Additional Investigation Material Requirements (A&I&T)
3.7.3.b WV Environment (list of materials)

Requirement Summary:

The investigation hardware shall comply with the material requirement as specified herein.

Detailed Descriptions of Requirements:

A. Investigation hardware shall meet the Materials and Parts use and selection requirements as specified in MSFC-RQMT-2888 Paragraph 3.9.1.

B. Investigation hardware shall meet the offgassing acceptance requirements as specified in MSFC-RQMT-2888, Paragraph 3.9.1.2.a.

C. Materials and byproducts (combustion) used by the investigation that are not listed in MSFC-RQMT-2888 Table XXXIV or exceed the values given in Table XXXIV shall be approved by the IIT. A list of the materials, byproducts and their quantity shall be provided to the IIT for approval. The investigation shall provide this list to the JSC Toxicology Group and comply with the labeling standards as specified in MSFC-RQMT-2888, Paragraph 3.9.1.2.h.

D. Investigations that use materials that are not listed in MSFC-RQMT-2888 Table XXXIV and have been approved by the IIT shall provide their own cleaning equipment in case of spillage and take care of waste disposal. Verification shall be considered successful when the crew procedures show that the investigation has proper equipment and procedures in place to meet the requirement.

E. Investigations that use materials that are not listed in MSFC-RQMT-2888 Table XXXIV and have been approved by the IIT shall verify that the materials are compatible with the MSG gloves. Verification shall be considered successful when the analysis confirms compliance with the requirement.

| Required Verification Data: | Data Submittal Dates: |
|---|---|
| 1. Preliminary list of the materials and byproducts to the IIT for approval. | 1. L-20 |
| 2. Final list providing all the materials and byproducts to the IIT for approval, (additional updates as required). | 2. L-12 |
| 3. Data Cert. Stating compliance with section 3.9.1. | 3. L-8 |
| 4. Data Cert. with any update/changes to the materials and byproducts list. | 4. L-8 |

| Description of Reverification Requirements: | Reverification Method: | Hazard Report(s): |
|---|---|---|
| | | |

| Required Reverification Data: | Data Submittal Dates: |
|---|---|
| | |

Applicable Document(s):

NSTS.1700.7

This Page Intentionally Left Blank

# APPENDIX F
# OPEN ITEMS

**Table XXXIV. To Be Determined Items**

| TBD No. | Description | Document Section | Page No. | Reason |
|---|---|---|---|---|
| 1 | Quasi-Steady Requirement | 3.1.2.1 | 14 | Need information from MSG |
| 2 | Vibratory Requirement | 3.1.2.2 | 14 | Need information from MSG |
| 3 | Transient Requirements | 3.1.2.3 | 15 | Need information from MSG |

**Table XXXV. To Be Confirmed Items**

| TBC No. | Description | Document Section | Page No. | Reason |
|---|---|---|---|---|
| 1 | Primary Power Connector | 3.2.2.1 | 22 | Need MSG to verify 1.5 VDC line loss. |

PACKAGE NO. 9557R

DOCUMENTATION RELEASE LIST
GEORGE C. MARSHALL SPACE FLIGHT CENTER

MSFC CODE IDENT 14981
ISSUE DATE AUG 06 2001



| C H | DOCUMENT NUMBER | DRL DSH | DRL REV | TITLE | CCBD NO. | PCN | PC | EFFECTIVITY |
|---|---|---|---|---|---|---|---|---|
| * | MSFC-RQMT-2888 | 203 - | | MSG IIRD | GB3-02-0013 | GB00213 | GB | 61 |

| CHG NO. | CHG REV | CHG NOTICE | RESPONSIBLE ENGINEER | RESPONSIBLE ORGANIZATION | ACTION DATE | DESCRIPTION |
|---|---|---|---|---|---|---|
| * 2 | B | DCN002 | DOUG MARTIN | SD46 | 08/06/01 | REVISION B REPLACES REVISION A AND INCORPORATES DCN002 IN LIEU OF DOCUMENT REPLACEMENT PAGES. |

CHECKER

DON HAMILTON
07/31/01

(FINAL)

# DOCUMENT INPUT RECORD

## I. TO BE COMPLETED UPON SUBMITTAL OF DATA

| 1. APPROVED PROJECT: | 2. DOCUMENT/ DRAWING NO.: | 3. CONTROL NUMBER: | 4. DOCUMENT RELEASE DATE: | 5. SUBMITTAL DATE: |
|---|---|---|---|---|
| MSGI | MSFC-RQMT-2888B | DPRS 9557R | 8-6-2001 | 8-6-2001 |

| 6. DOCUMENT/DRAWING TITLE: | 7. REPORT TYPE: |
|---|---|
| MSGI IIRD | Document |

| 8. CONTRACT NO./PERFORMING ACTIVITY: | 9. DRD NUMBER: | 10. DPD / DRL / IDRD NUMBER: |
|---|---|---|
| 101-51-10 | N/A | N/A |

| 11. DISPOSITION AUTHORITY (official records only): | 12. SUBMITTAL AUTHORITY: | 13. RELEASING AUTHORITY: |
|---|---|---|
| SD46 | SD46 | SD46 |

14. SPECIAL INSTRUCTIONS:
N/A

| 15. CONTRACTOR/SUBMITTING ORGANIZATION, ADDRESS AND PHONE NUMBER: | 16. ORIGINATING NASA CENTER: |
|---|---|
| MSFC | MSFC |
| | 17. OFFICE OF PRIMARY RESPONSIBILITY: SD46 |

| 18. KEYWORDS: | 19. NUMBER OF PAGES: | 20. SECURITY CLASSIFICATION OF REPORT: |
|---|---|---|
| | ~~299~~ ~~316~~ 317 CB | unclassified |

## II. TO BE COMPLETED FOR ENGINEERING DRAWINGS

| 21. REVISION: | 22. ENG. ORDER: | 23. PARTS LIST: | 24. CCBD: |
|---|---|---|---|
| N/a | N/a | N/A | N/A |

## III. TO BE COMPLETED FOR REPORTS, SPECIFICATIONS, ETC.

| 25. REVISION: | 26. CHANGE: | 27. VOLUME: | 28. BOOK: | 29. PART: | 30. SECTION: |
|---|---|---|---|---|---|
| ~~A~~ B CB | ~~N/A~~ 2 CB | N/A | N/A | N/A | N/A |

| 31. ISSUE: | 32. ANNEX: | 33. SCN: | 34. DCN: | 35. AMENDMENT: |
|---|---|---|---|---|
| N/A | N/A | N/A | ~~N/A~~ 002 CB | N/A |

| 36. APPENDIX: | 37. ADDENDUM: | 38. CCBD: | 39. CODE ID: | 40. IRN: |
|---|---|---|---|---|
| N/A | N/A | GB3-02-0013 CB | 14981 | N/A |

## IV. EXPORT AND DISTRIBUTION RESTRICTIONS

- ☐ Privacy Act (see MWI 1382.1)
- ☐ Proprietary (see MPD 2210.1)
- ☐ Patent (see MPG 2220.1)
- ☐ ITAR (see MPG 2220.1)
- ☐ EAR (see MPG 2220.1)
- ☒ No statutory or institutional restrictions applicable -- material may be distributed to public (including placement on the World Wide Web)
- ☐ ACI (see MPG 1600.1)

## V. ORIGINATING ORGANIZATION APPROVAL

| 41. NAME: | 42. SIGNATURE: | 43. ORG. CODE: | 44. PHONE NUMBER: | 45. DATE: |
|---|---|---|---|---|
| C. Dexter SD46/~~D. MCCAGHREN~~ | Carol E Dexter | SD46 | (000) 544-9361 | 07/31/2001 |

## VI. TO BE COMPLETED BY MSFC DOCUMENTATION REPOSITORY

| 46. RECEIVED BY: | 47. DATE RECEIVED: | 48. WORK ORDER: |
|---|---|---|
| Linda Pulliam | 8-7-01 | 02-00840 |

MSFC Form 2896 (Rev. August 2000) PREVIOUS EDITIONS ARE OBSOLETE Informed